ENGINE LUBRICATION & COOLING SYSTEMS

SECTION LC

CONTENTS

QG

ENGINE LUBRICATION SYSTEM 3
Precautions 3
LIQUID GASKET APPLICATION PROCEDURE 3
Preparation 3
SPECIAL SERVICE TOOLS 3
Lubrication Circuit 4
Oil Pressure Check 5
Oil Pump 5
REMOVAL AND INSTALLATION 5
DISASSEMBLY AND ASSEMBLY 6
INSPECTION 7
REGULATOR VALVE INSPECTION 7
Changing Engine Oil 8
Changing Oil Filter 9
Service Data and Specifications (SDS) 10
OIL PRESSURE CHECK 10
OIL PUMP INSPECTION 10
REGULATOR VALVE INSPECTION 10
OIL CAPACITY 10
ENGINE COOLING SYSTEM 11
Precautions 11
LIQUID GASKET APPLICATION PROCEDURE 11
Preparation 11
SPECIAL SERVICE TOOLS 11
Cooling Circuit 12
System Check 12
CHECKING COOLING SYSTEM HOSES 12
CHECKING RADIATOR 13
CHECKING RADIATOR CAP 13
CHECKING COOLING SYSTEM FOR LEAKS 13
Water Pump 14
REMOVAL AND INSTALLATION 14
INSPECTION 14
Thermostat 15
REMOVAL AND INSTALLATION 15
INSPECTION 16
Radiator 16
COMPONENTS 16
Cooling Fan 17
COMPONENTS 17
CONTROL SYSTEM 18
Changing Engine Coolant 18
- DRAINING ENGINE COOLANT - 18
- REFILLING ENGINE COOLANT - 19
- FLUSHING COOLING SYSTEM - 19
Overheating Cause Analysis 20
Service Data and Specifications (SDS) 21
THERMOSTAT 21
RADIATOR 21
COOLANT CAPACITY 21

YD

ENGINE LUBRICATION SYSTEM 22
Precautions 22
LIQUID GASKET APPLICATION PROCEDURE 22
Preparation 22
SPECIAL SERVICE TOOLS 22
Lubrication Circuit 23
Oil Pressure Check 24
Oil Pump 24
REMOVAL AND INSTALLATION 24
DISASSEMBLY AND ASSEMBLY 25
OIL PUMP INSPECTION 25
REGULATOR VALVE INSPECTION 26
Changing Engine Oil 27
Oil Filter Bracket 28
REMOVAL AND INSTALLATION 28
Changing Oil Filter 28
REMOVAL 29
INSTALLATION 29
Oil Cooler 30
REMOVAL AND INSTALLATION 30
Service Data and Specifications (SDS) 31
OIL PRESSURE CHECK 31
REGULATOR VALVE INSPECTION 31
OIL PUMP INSPECTION 31
ENGINE OIL CAPACITY 31
ENGINE COOLING SYSTEM 32
Precautions 32

CONTENTS (Cont'd)

LIQUID GASKET APPLICATION PROCEDURE.....32
Preparation 32
SPECIAL SERVICE TOOLS.....32
Cooling Circuit 33
System Check.....34
CHECKING COOLING SYSTEM HOSES.....34
CHECKING RADIATOR.....34
CHECKING RADIATOR CAP.....34
CHECKING COOLING SYSTEM FOR LEAKS.....35
Water Pump.....35
REMOVAL AND INSTALLATION.....35
REMOVAL.....36
INSPECTION.....36
INSTALLATION.....36
Thermostat.....37
REMOVAL AND INSTALLATION.....37
INSPECTION.....38
Radiator 39
COMPONENTS 39
REMOVAL AND INSTALLATION.....39
Cooling Fan 40
COMPONENTS 40
CONTROL SYSTEM 40
Changing Engine Coolant.....40
- DRAINING ENGINE COOLANT - 40
- REFILLING ENGINE COOLANT - 41
- FLUSHING COOLING SYSTEM -.....41
Overheating Cause Analysis 42
Service Data and Specifications (SDS).....43
THERMOSTAT 43
RADIATOR.....43
ENGINE COOLANT CAPACITY 43

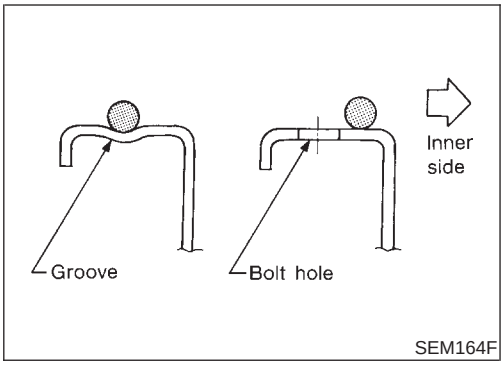

SEM164F

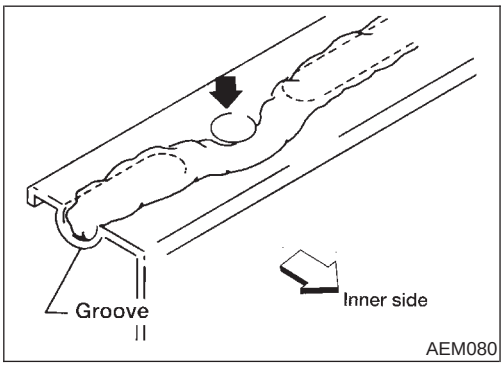

AEM080

Precautions

LIQUID GASKET APPLICATION PROCEDURE

NLLC0001

1. Use a scraper to remove all traces of old liquid gasket from mating surfaces and grooves. Also, completely clean any oil from these areas.
2. Apply a continuous bead of liquid gasket to mating surfaces. (Use Genuine Liquid Gasket or equivalent.)
   - For oil pan, be sure liquid gasket diameter is 3.5 to 4.5 mm (0.138 to 0.177 in).
   - For areas except oil pan, be sure liquid gasket diameter is 2.0 to 3.0 mm (0.079 to 0.118 in).
3. Apply liquid gasket around the inner side of bolt holes (unless otherwise specified).
4. Assembly should be done within 5 minutes after coating.
5. Wait at least 30 minutes before refilling engine oil and engine coolant.

Preparation

SPECIAL SERVICE TOOLS

NLLC0002

Tool number Tool name	Description	
ST25051001 Oil pressure gauge	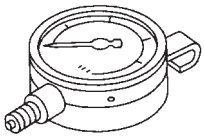 NT050	Measuring oil pressure
ST25052000 Hose	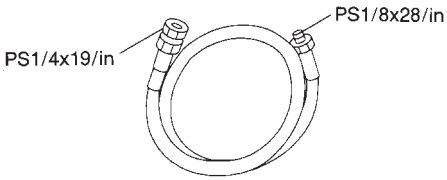 NT559	Adapting oil pressure gauge to cylinder block
KV10115801 Oil filter wrench	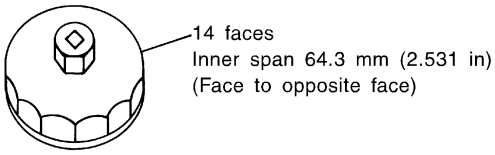 NT772	Removing oil filter
WS39930000 Tube presser	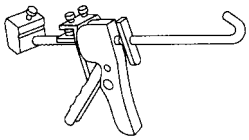 NT052	Pressing the tube of liquid gasket

Lubrication Circuit

NLLC0003

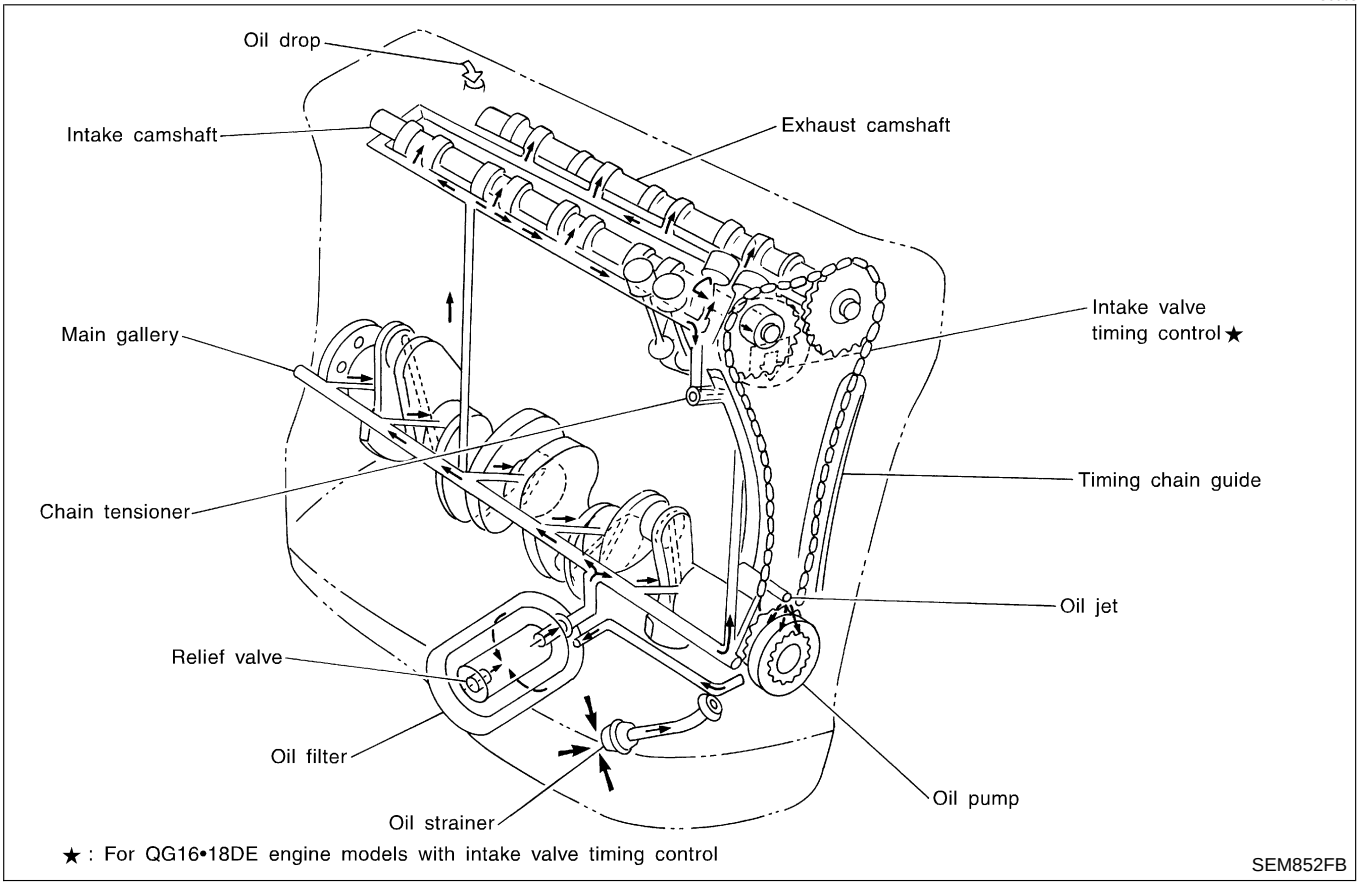

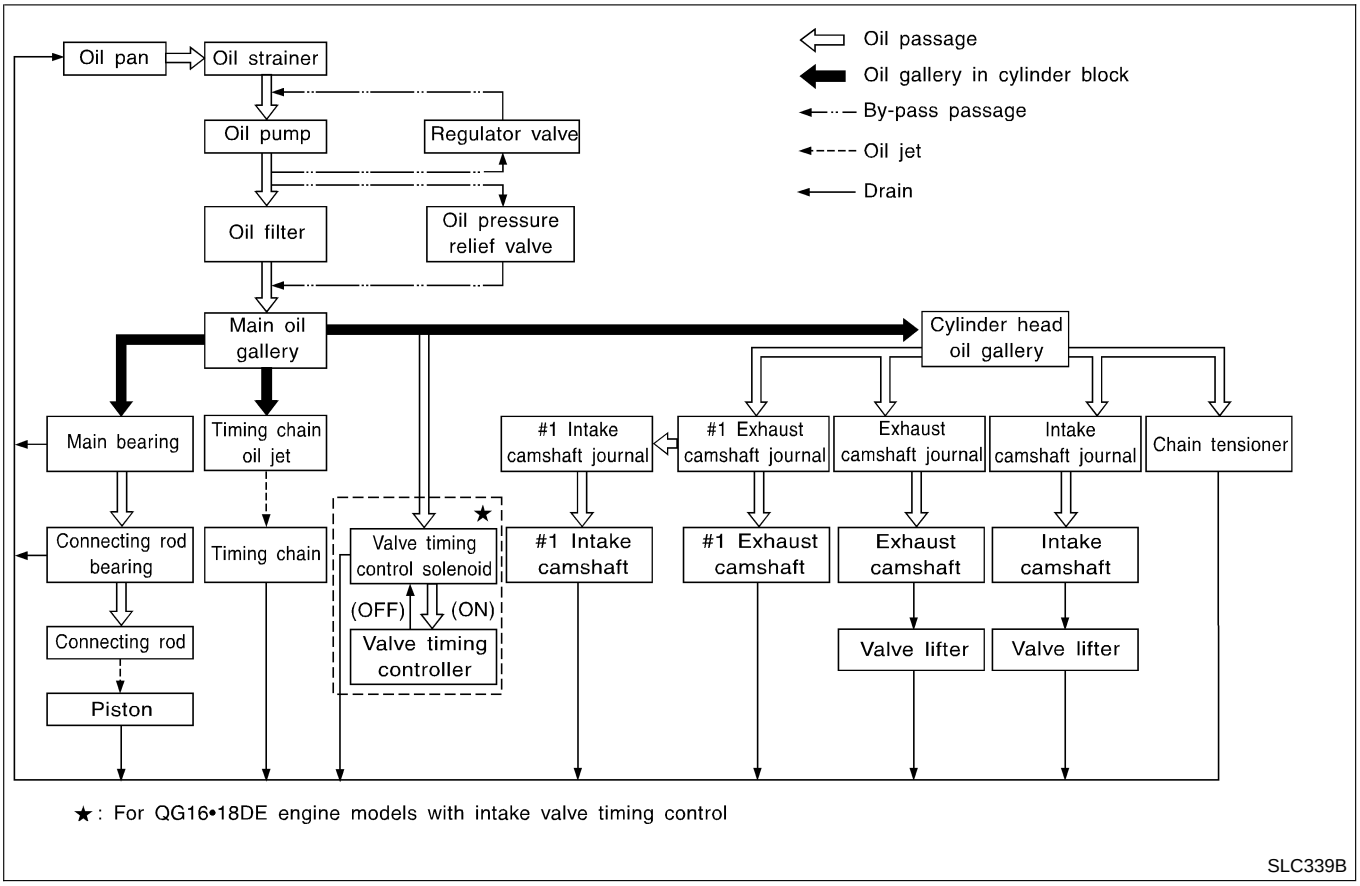

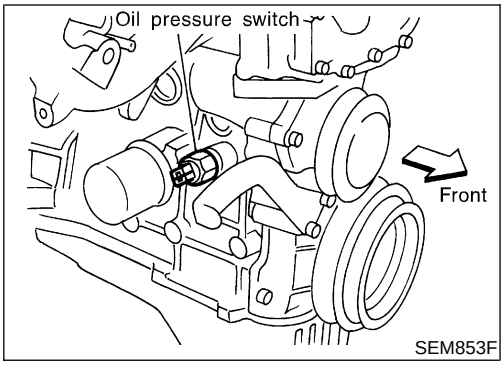

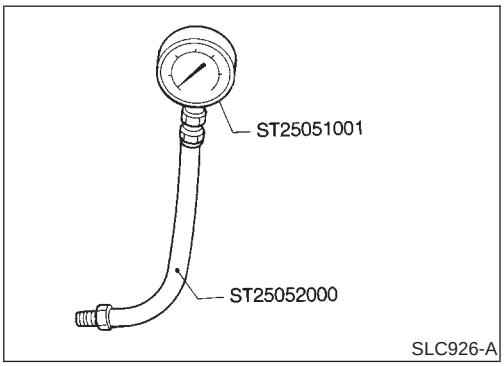

Oil Pressure Check

NLLC0004

WARNING:

- **Be careful not to burn yourself, as the engine and oil may be hot.**
- **For M/T models, put gearshift lever in Neutral "N" position.**

1. Check oil level.
2. Remove oil pressure switch.
3. Install pressure gauge.
4. Start engine and warm it up to normal operating temperature.
5. Check oil pressure with engine running under no-load.

Engine speed rpm	Approximate discharge pressure kPa (bar, kg/cm^2, psi)
600	More than 98 (0.98, 1.0, 14)
2,000	More than 294 (2.94, 3.0, 43)
6,000	More than 392 (3.92, 4.0, 57)

- **If difference is extreme, check oil passage and oil pump for oil leaks.**

6. Install oil pressure switch with sealant.
   : 13 - 17 N·m (1.25 - 1.75 kg-m, 9 - 12 ft-lb)

Oil Pump

REMOVAL AND INSTALLATION

NLLC0005

- **Make sure that O-ring is fitted properly.**

1. Drain engine oil.
2. Remove drive belts.
3. Remove oil pan. Refer to EM-25, "OIL PAN AND OIL STRAINER".
4. Remove oil strainer.
5. Remove front cover. Refer to EM-50, "TIMING CHAIN".
6. Install front cover.
7. Reinstall parts in reverse order of removal.

DISASSEMBLY AND ASSEMBLY

NLLC0006

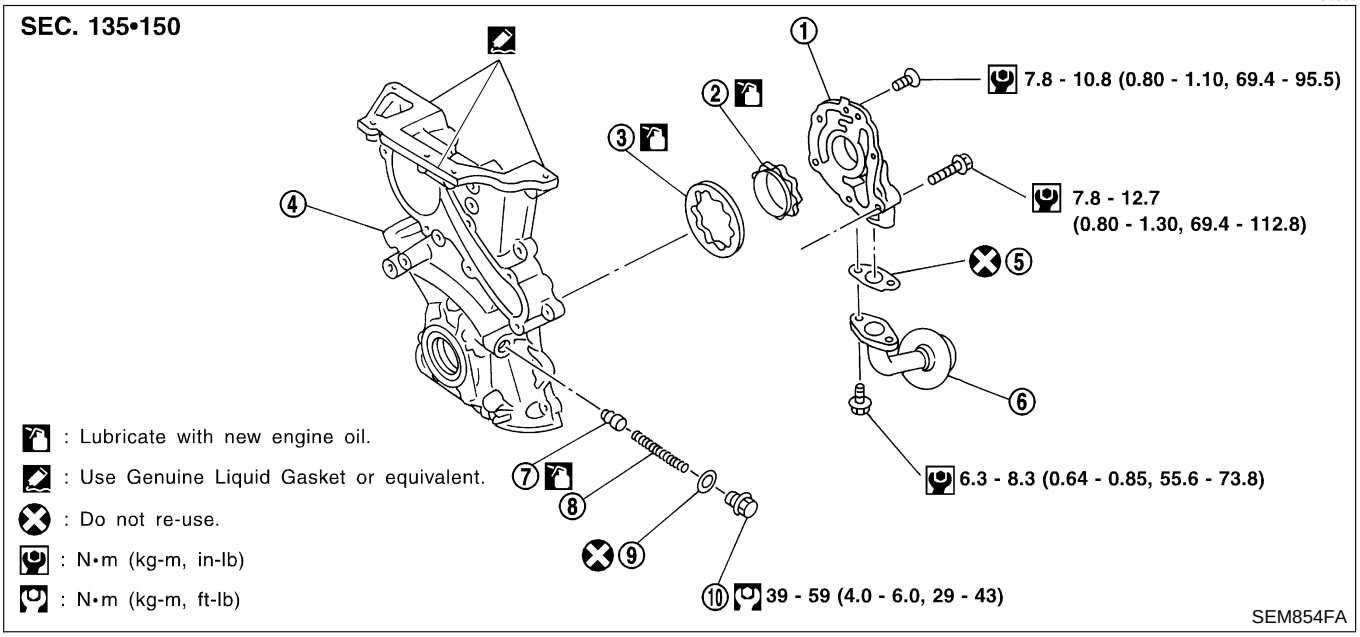

1. Oil pump cover
2. Inner rotor
3. Outer rotor
4. Front cover
5. Gasket
6. Oil strainer
7. Regulator valve
8. Spring
9. Washer
10. Plug

- **When installing oil pump, apply engine oil to rotors.**

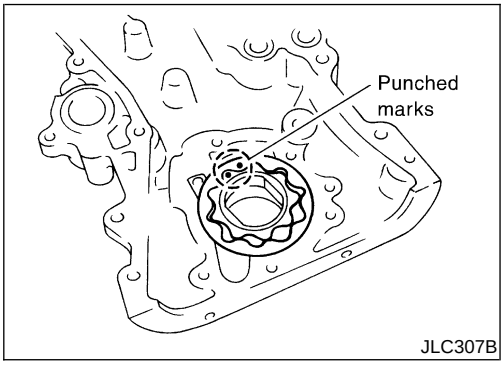

- **Install the inner rotor and outer rotor with the punched marks on the oil pump cover side.**

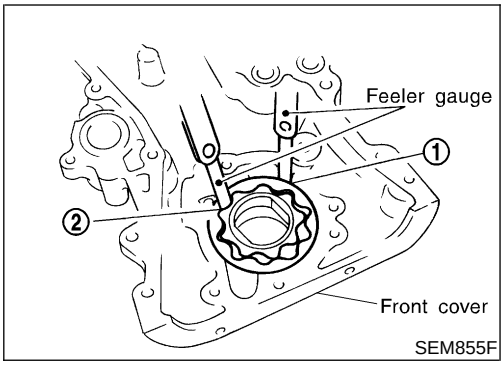

SEM855F

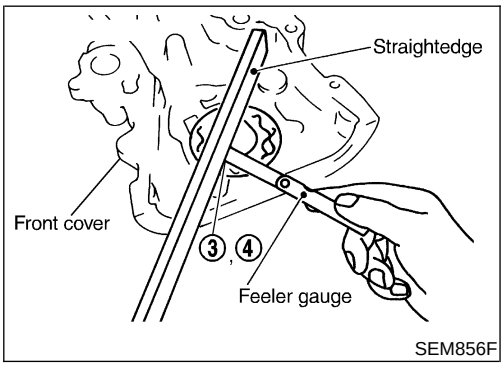

SEM856F

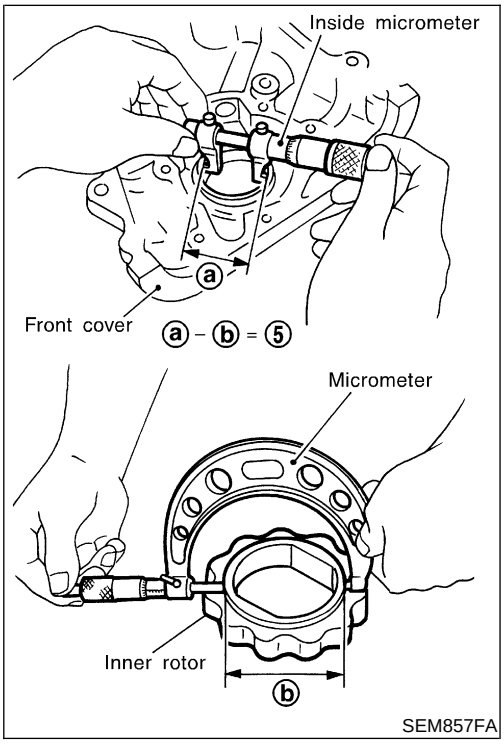

SEM857FA

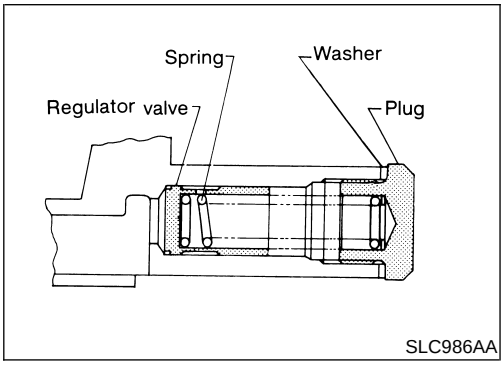

SLC986AA

INSPECTION

NLLC0007

Using a feeler gauge, check the following clearances.

Standard clearance:

Unit: mm (in)

Body to outer rotor radial clearance **1**	0.250 - 0.325 (0.0098 - 0.0128)
Inner rotor to outer rotor tip clearance **2**	Below 0.18 (0.0071)
Body to inner rotor clearance **3**	0.030 - 0.085 (0.0012 - 0.0033)
Body to outer rotor axial clearance **4**	0.030 - 0.090 (0.0012 - 0.0035)
Inner rotor to brazed portion of housing clearance **5**	0.045 - 0.091 (0.0018 - 0.0036)

- **If the tip clearance (2) exceeds the limit, replace rotor set.**
- **If body to rotor clearances (1, 3, 4, 5) exceed the limit, replace front cover assembly.**

REGULATOR VALVE INSPECTION

NLLC0008

1. Visually inspect components for wear and damage.
2. Check oil pressure regulator valve sliding surface and valve spring.
3. Coat regulator valve with engine oil.
   Check that it falls smoothly into the valve hole by its own weight.

If damaged, replace regulator valve set or front cover assembly.

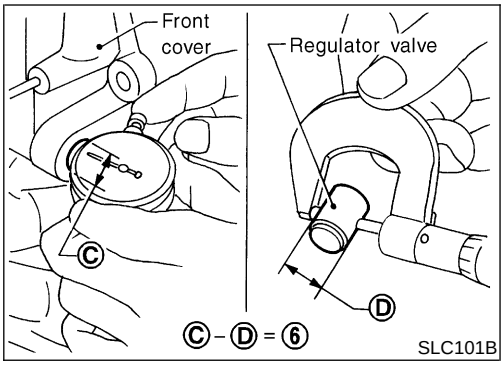

4. Check regulator valve to front cover clearance.

   Clearance 6:

   0.052 - 0.088 mm (0.0020 - 0.0035 in)

If it exceeds the limit, replace front cover assembly.

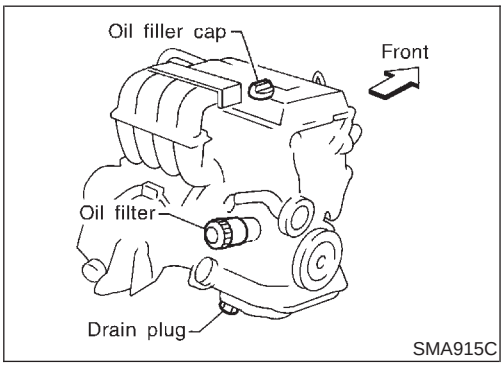

Changing Engine Oil

NLLC0035

WARNING:

- **Be careful not to burn yourself, as the engine oil is hot.**
- **Prolonged and repeated contact with used engine oil may cause skin cancer; try to avoid direct skin contact with used oil. If skin contact is made, wash thoroughly with soap or hand cleaner as soon as possible.**

1. Warm up engine, and check for oil leakage from engine components.
2. Stop engine and wait more than 10 minutes.
3. Remove drain plug and oil filler cap.
4. Drain oil and refill with new engine oil.

Oil specification and viscosity (For Europe):

- **API grade SG, SH or SJ**
- **ACEA grade A1-98, A3-98**
- **ILSAC grade GF-I, GF-II**

  Refer to MA-20, "RECOMMENDED FLUIDS AND LUBRICANTS".

Refill oil capacity (Approximate):

Unit: ℓ (Imp qt)

With oil filter change	2.7 (2-3/8)
Without oil filter change	2.5 (2-1/4)
Dry engine (engine overhaul)	3.1 (2-3/4)

CAUTION:

- **Be sure to clean drain plug and install with new washer.**

  Drain plug:

  : 29 - 39 N·m (3.0 - 4.0 kg-m, 22 - 29 ft-lb)

- **The refill capacity changes depending on the oil temperature and drain time, use these values as a reference and be certain to check with the dipstick when changing the oil.**

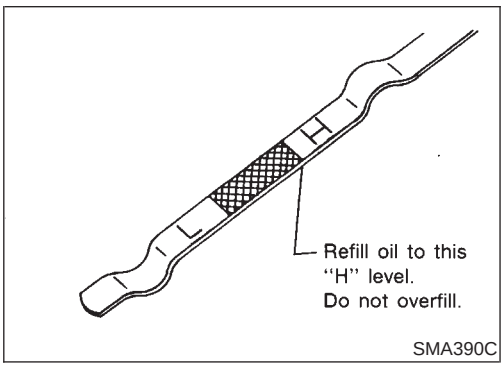

5. Check oil level.
6. Start engine and check area around drain plug and oil filter for oil leakage.
7. Run engine for a few minutes, then turn it off. After several minutes, check oil level.

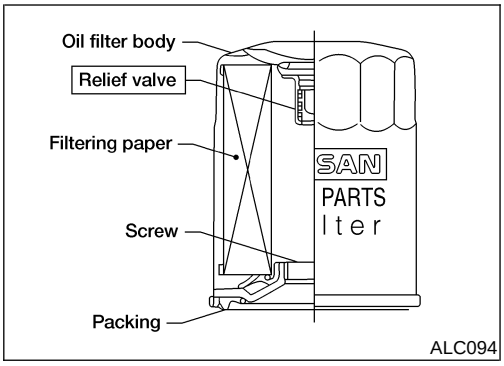

ALC094

Changing Oil Filter

NLLC0010

The oil filter is a small, full-flow cartridge type and is provided with a relief valve.

- **Use Tool KV10115801 for removing oil filter.**

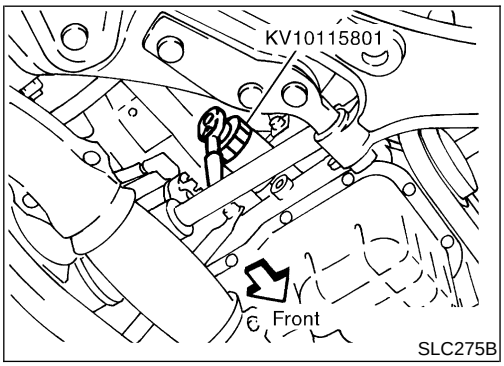

SLC275B

1. Remove oil filter with Tool.

WARNING:
Be careful not to burn yourself, as the engine and the engine oil are hot.

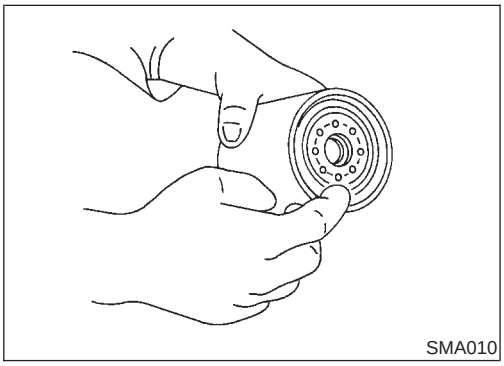
SMA010

2. Clean oil filter mounting surface on cylinder block. Coat rubber seal of new oil filter with engine oil.

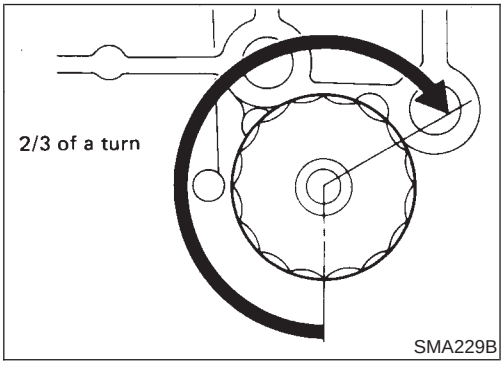

SMA229B

3. Screw in the oil filter until a slight resistance is felt, then tighten an additional 2/3 turn.
4. Add engine oil.
   Refer to Changing Engine Oil.

- **Clean excess oil from engine.**

Service Data and Specifications (SDS)

OIL PRESSURE CHECK

=NLLC0011

Engine speed rpm	Approximate discharge pressure kPa (bar, kg/cm^2, psi)
600	More than 98 (0.98, 1.0, 14)
2,000	More than 294 (2.94, 3.0, 43)
6,000	More than 392 (3.92, 4.0, 57)

OIL PUMP INSPECTION

NLLC0013

Unit: mm (in)

Body to outer rotor radial clearance	0.250 - 0.325 (0.0098 - 0.0128)
Inner rotor to outer rotor tip clearance	Below 0.18 (0.0071)
Body to inner rotor clearance	0.030 - 0.085 (0.0012 - 0.0033)
Body to outer rotor axial clearance	0.030 - 0.090 (0.0012 - 0.0035)
Inner rotor to brazed portion of housing clearance	0.045 - 0.091 (0.0018 - 0.0036)

REGULATOR VALVE INSPECTION

NLLC0012

Unit: mm (in)

Regulator valve to oil pump cover clearance	0.052 - 0.088 (0.0020 - 0.0035)

OIL CAPACITY

NLLC0036

Unit: ℓ (Imp qt)

With oil filter change	2.7 (2-3/8)
Without oil filter change	2.5 (2-1/4)
Dry engine (engine overhaul)	3.1 (2-3/4)

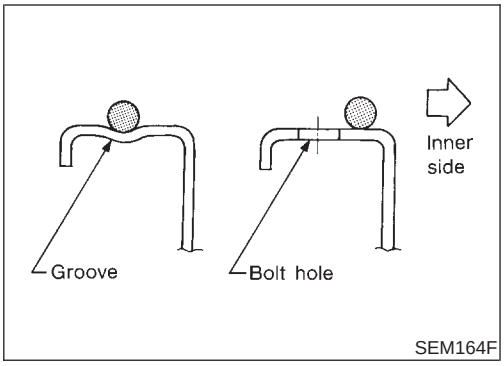

SEM164F

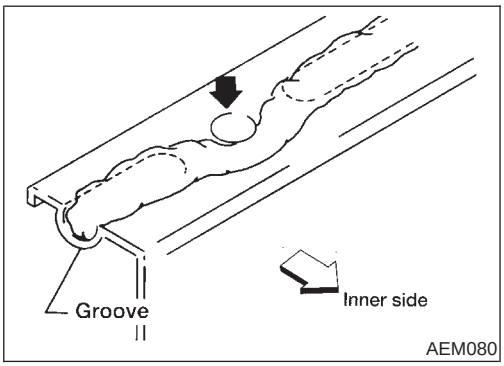

AEM080

Precautions

LIQUID GASKET APPLICATION PROCEDURE

NLLC0014

1. Use a scraper to remove all traces of old liquid gasket from mating surfaces and grooves. Also, completely clean any oil from these areas.
2. Apply a continuous bead of liquid gasket to mating surfaces. **(Use Genuine Liquid Gasket or equivalent).**
- For oil pan, be sure liquid gasket diameter is 3.5 to 4.5 mm (0.138 to 0.177 in).
- For areas except oil pan, be sure liquid gasket diameter is 2.0 to 3.0 mm (0.079 to 0.118 in).
3. Apply liquid gasket around the inner side of bolt holes (unless otherwise specified).
4. Assembly should be done within 5 minutes after coating.
5. Wait at least 30 minutes before refilling engine oil and engine coolant.

Preparation

SPECIAL SERVICE TOOLS

NLLC0015

Tool number Tool name	Description
EG17650301 Radiator cap tester adapter	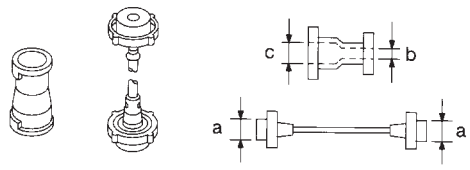 NT564 Adapting radiator cap tester to radiator filler neck **a: 28 (1.10) dia.** **b: 31.4 (1.236) dia.** **c: 41.3 (1.626) dia.** Unit: mm (in)

Cooling Circuit

NLLC0016

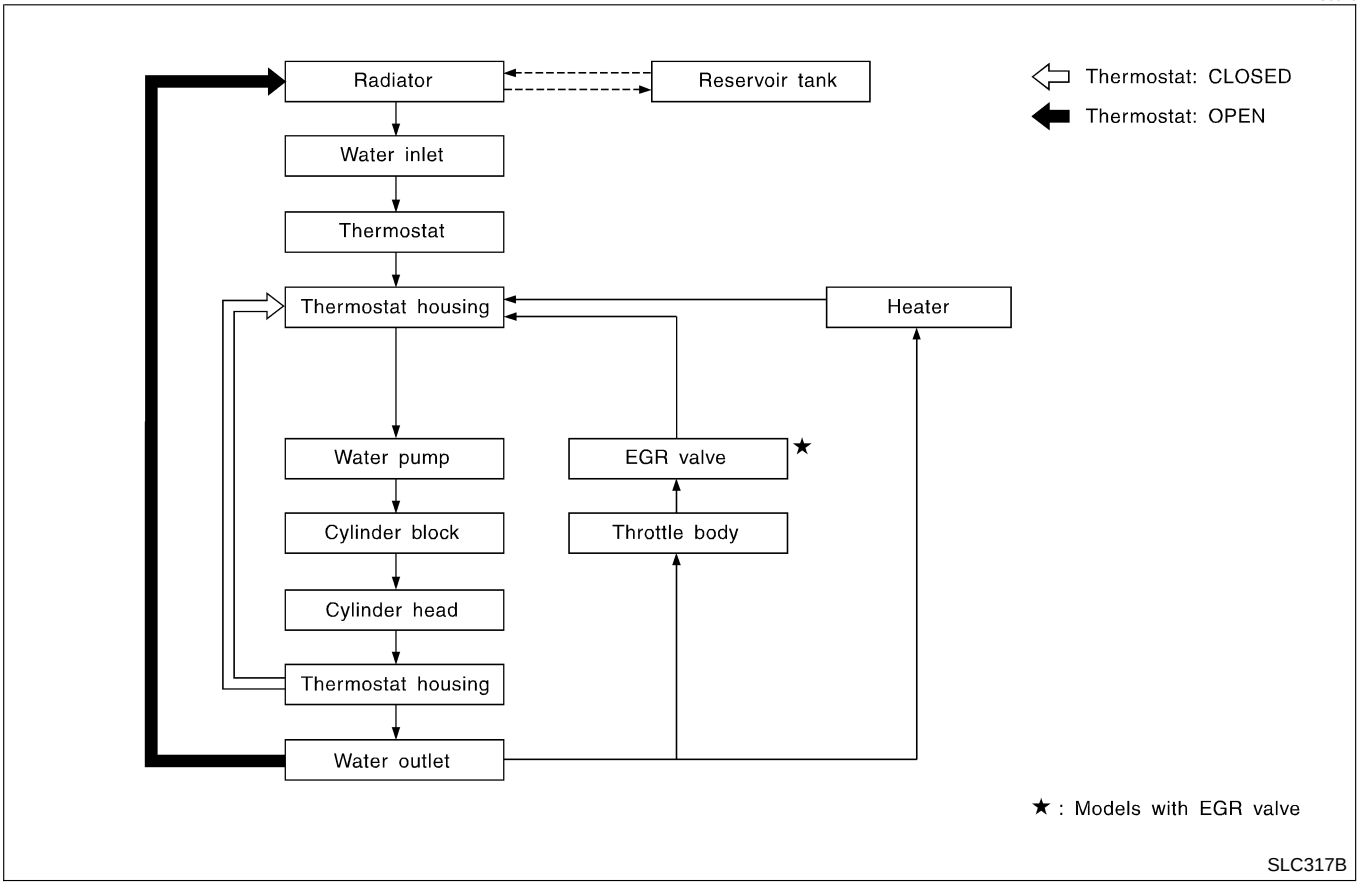

System Check

NLLC0017

WARNING:

Never remove the radiator cap when the engine is hot. Serious burns could occur from high pressure fluid escaping from the radiator.

Wrap a thick cloth around the cap. Slowly turn it a quarter turn to allow built-up pressure to escape. Carefully remove the cap by turning it all the way.

CHECKING COOLING SYSTEM HOSES

NLLC0017S01

Check hoses for the following:

- Improper attachment
- Leaks
- Cracks
- Damage
- Loose connections
- Chafing
- Deterioration

CHECKING RADIATOR

NLLC0017S04

Check radiator for mud or clogging. If necessary, clean radiator as follows.

- Be careful not to bend or damage the radiator fins.
- When radiator is cleaned without removal, remove all surrounding parts such as cooling fan, radiator shroud and horns. Then tape the harness and connectors to prevent water from entering.

1. Apply water by hose to the back side of the radiator core vertically download.
2. Apply water again to all radiator core surfaces once per minute.
3. Stop washing if any stains no longer flow out from the radiator.
4. Blow air into the back side of radiator core vertically download.
   - Use compressed air lower than 490 kPa (4.9 bar, 5 kg/cm^2 , 71 psi) and keep distance more than 30 cm (11.8 in).
5. Blow air again into all the radiator core surfaces once per minute until no water sprays out.

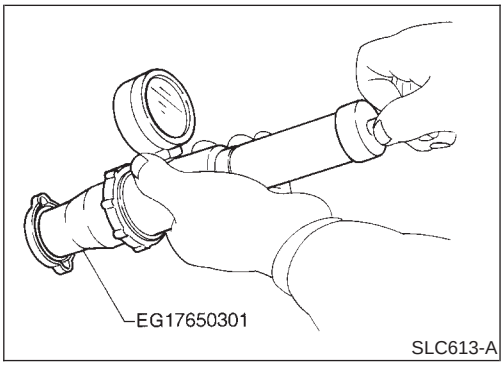

CHECKING RADIATOR CAP

NLLC0017S03

To check radiator cap, apply pressure to cap with a tester.

Radiator cap relief pressure:

Standard

78 - 98 kPa
(0.78 - 0.98 bar, 0.8 - 1.0 kg/cm^2, 11 - 14 psi)

Limit

59 kPa (0.59 bar, 0.6 kg/cm^2, 9 psi)

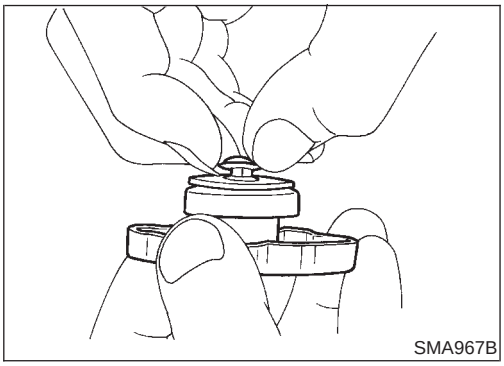

Pull the negative pressure valve to open it.
Check that it closes completely when released.

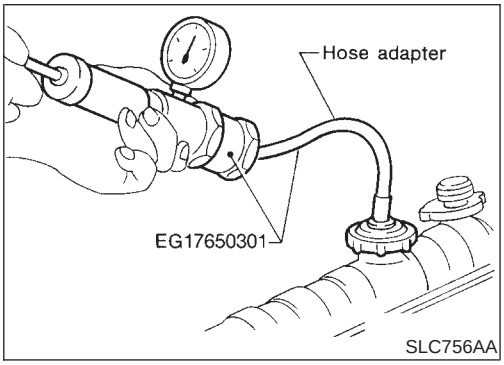

CHECKING COOLING SYSTEM FOR LEAKS

NLLC0017S02

To check for leakage, apply pressure to the cooling system with a tester.

Testing pressure:

157 kPa (1.57 bar, 1.6 kg/cm^2, 23 psi)

CAUTION:

Higher pressure than specified may cause radiator damage.

Water Pump

REMOVAL AND INSTALLATION

NLLC0018

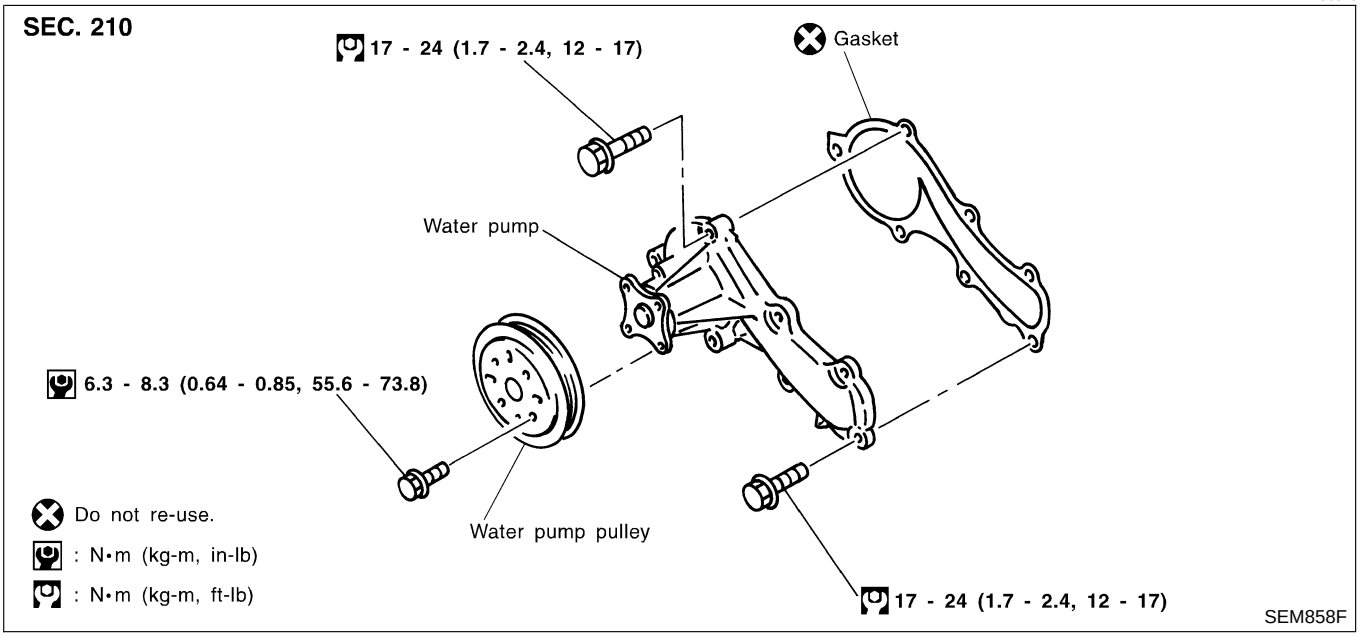

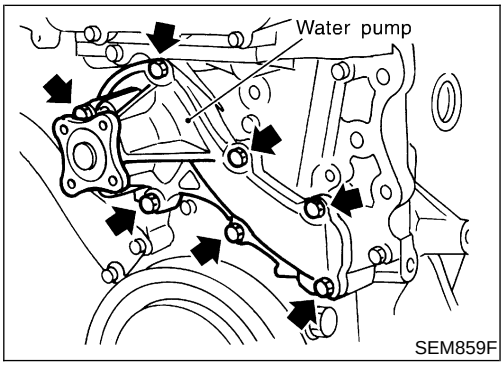

CAUTION:

- **When removing water pump assembly, be careful not to get coolant on drive belt.**
- **Water pump cannot be disassembled and should be replaced as a unit.**
- **After installing water pump, and check for leaks using radiator cap tester.**

1. Drain engine coolant.
   Refer to LC-18, “Changing Engine Coolant”.
2. Remove drive belts and idler pulley.
3. Loosen water pump pulley bolts.
4. Remove water pump pulley.
5. Remove front right wheel.
6. Remove front right undercover and front right fender protector.
7. Remove water pump bolts.
8. Remove water pump.
9. Reinstall parts in reverse order of removal.

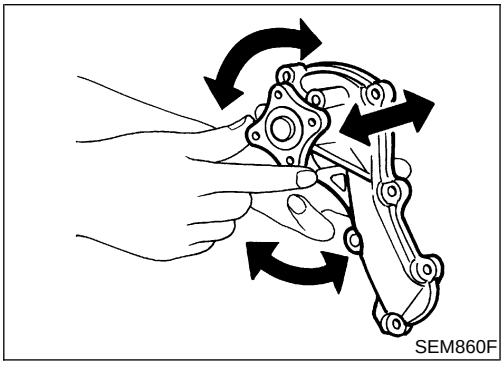

INSPECTION

NLLC0019

- Check body assembly and vane for rust or corrosion.
- Check for rough operation due to excessive end play.

Thermostat

REMOVAL AND INSTALLATION

NLLC0021

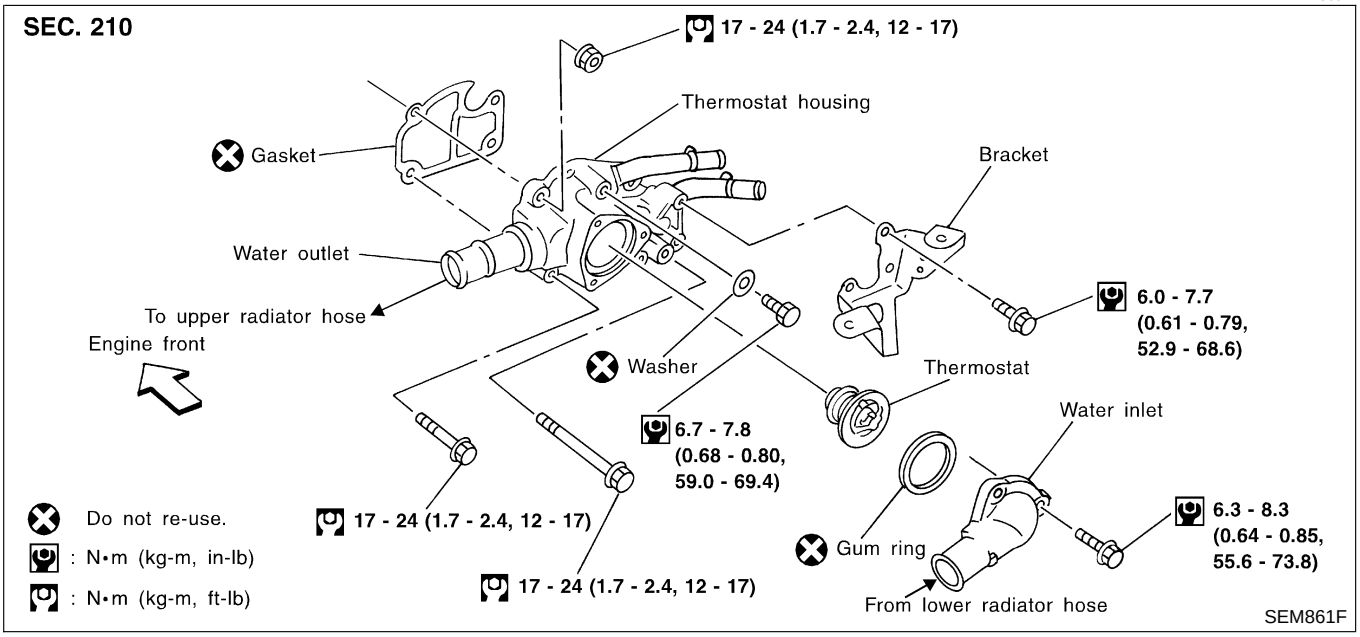

Be careful not to spill coolant over engine compartment. Use a rag to absorb coolant.

1. Drain engine coolant.
   Refer to LC-18, “Changing Engine Coolant”.
2. Remove water inlet, then take out thermostat.

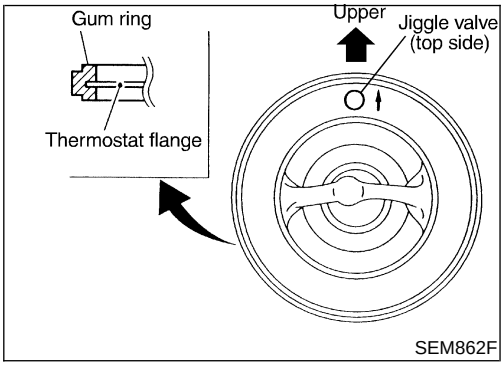

3. Install gum ring to thermostat.

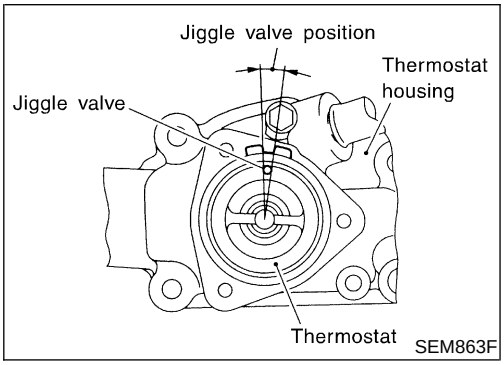

4. Install thermostat with jiggle valve or air bleeder at upper side. **After installation, run engine for a few minutes, and check for leaks.**

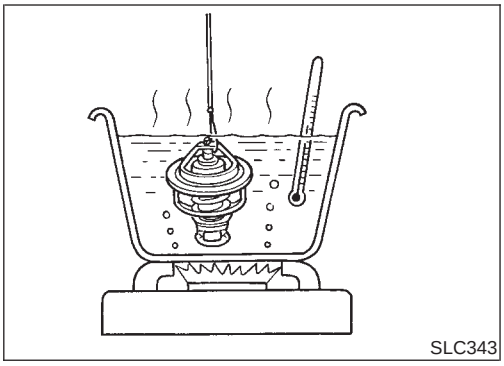

INSPECTION

NLLC0022

1. Check for valve seating condition at normal room temperature. It should seat tightly.
2. Check valve opening temperature and valve lift.

Valve opening temperature °C (°F)	82 (180)
Valve lift mm/°C (in/°F)	More than 8/95 (0.31/203)

3. Then check if valve closes at 5°C (9°F) below valve opening temperature.

Radiator

COMPONENTS

NLLC0025

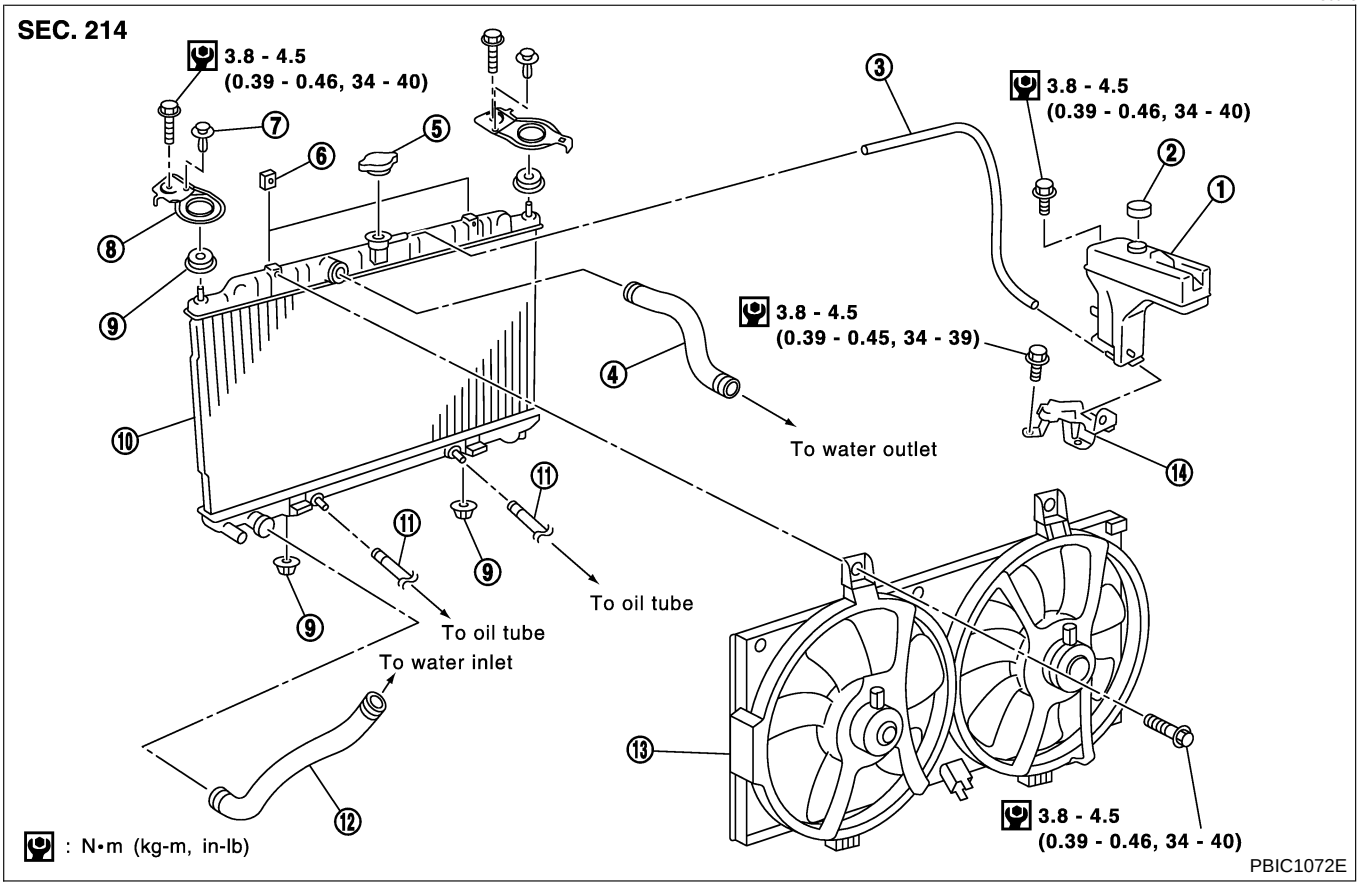

1. Reservoir tank
2. Cap
3. Reservoir tank hose
4. Radiator hose
5. Radiator cap
6. Nut
7. Clip
8. Mounting bracket
9. Mounting rubber
10. Radiator
11. A/T oil cooler hose
12. Upper radiator hose
13. Cooling fan assembly
14. Bracket

Cooling Fan

COMPONENTS

NLLC0026

NLLC0026S01

SEC. 214

TYPE 1

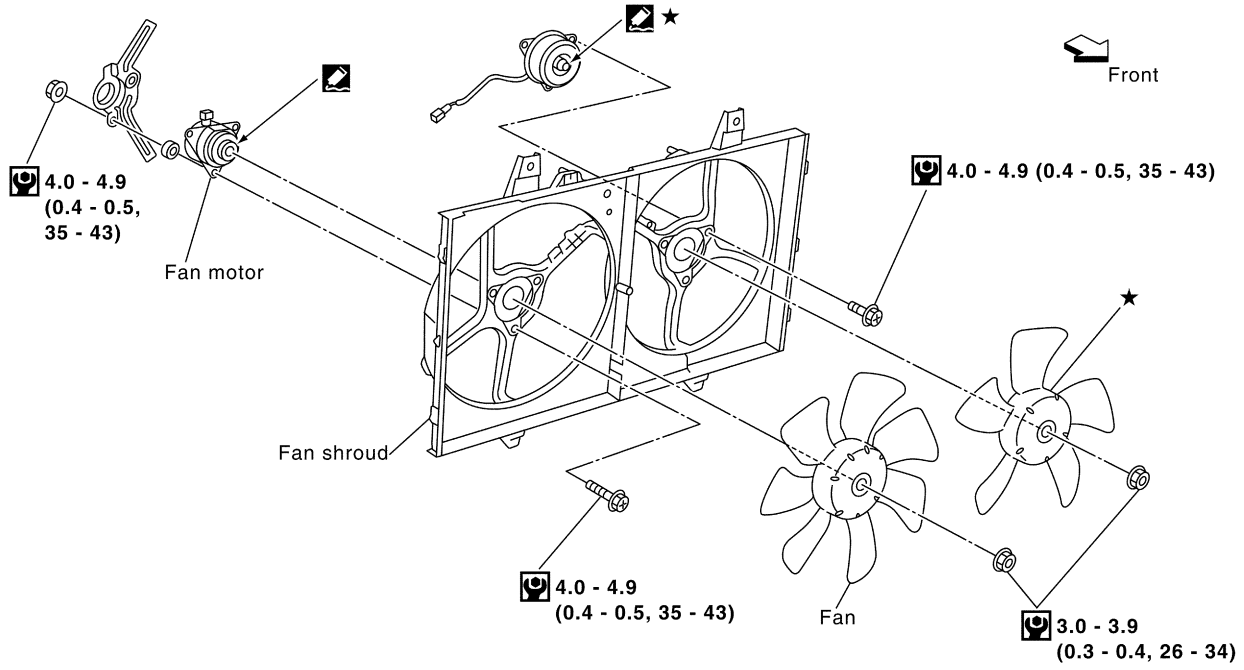

TYPE 2

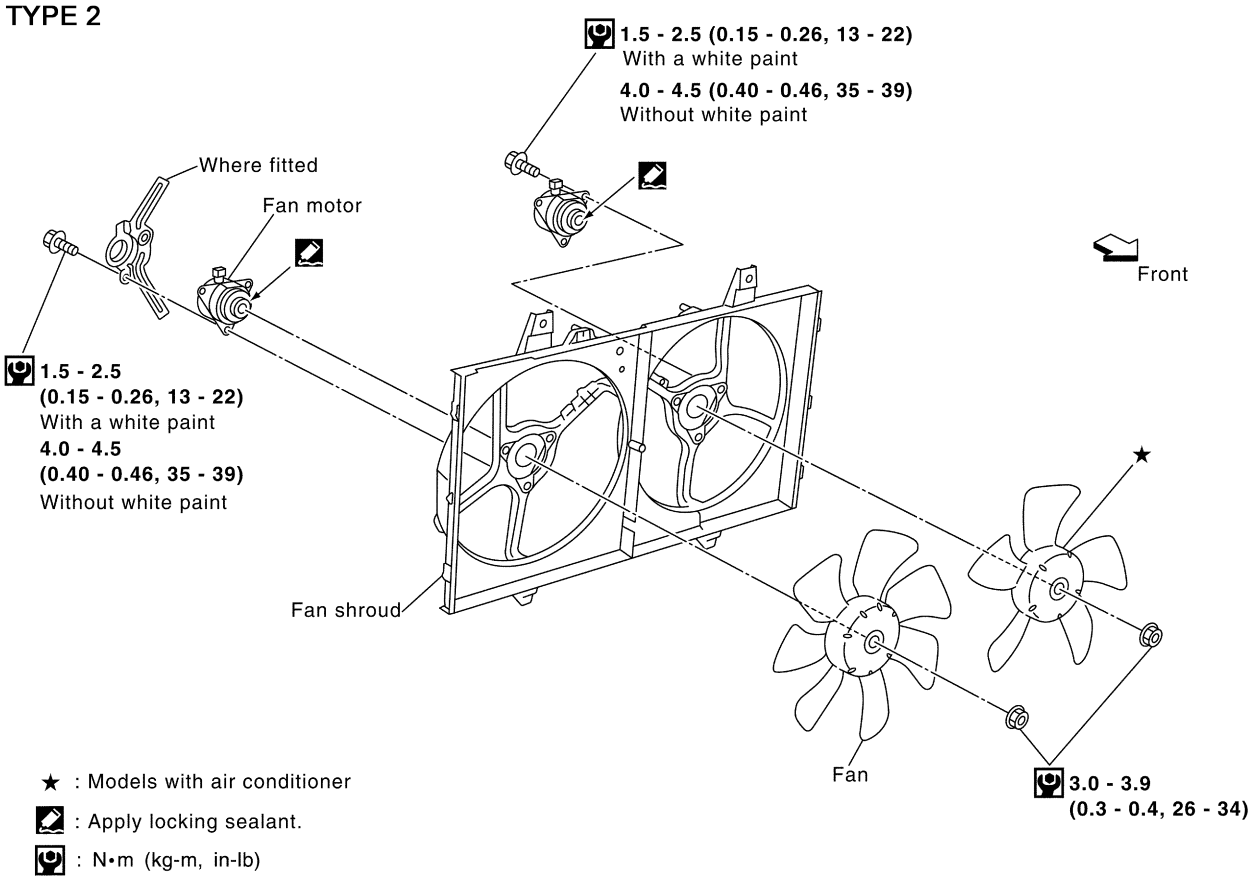

★ : Models with air conditioner

: Apply locking sealant.

: N•m (kg-m, in-lb)

YLC011

CONTROL SYSTEM

NLLC0026S02

Cooling fans are controlled by the ECM. For details, refer to EC-468 (with EURO-OBD), EC-775 (without EURO-OBD), TROUBLE DIAGNOSIS FOR OVERHEAT (COOLING SYSTEM).

Changing Engine Coolant

NLLC0037

WARNING:

To avoid the danger of being scalded, never change the coolant when the engine is hot.

— DRAINING ENGINE COOLANT —

NLLC0037S01

1. Set air conditioning system as follows to prevent coolant from remaining in the system.

a. Turn ignition switch ON and set temperature controller to maximum hot position.

b. Wait 10 seconds before turning ignition switch OFF.

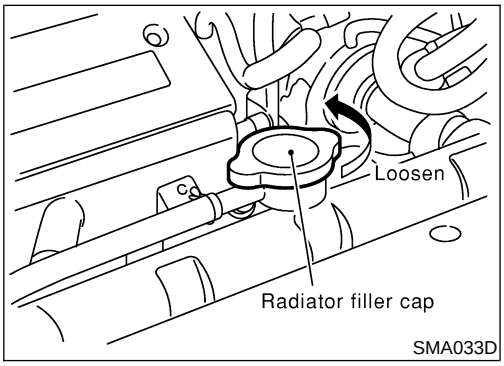

2. Remove lower radiator hose, and remove radiator filler cap to drain coolant.
3. Remove reservoir tank, drain coolant, then clean reservoir tank.

- **Be careful not to allow coolant to contact drive belts.**

4. Cover the exhaust tube heat shield to prevent from splashing coolant.

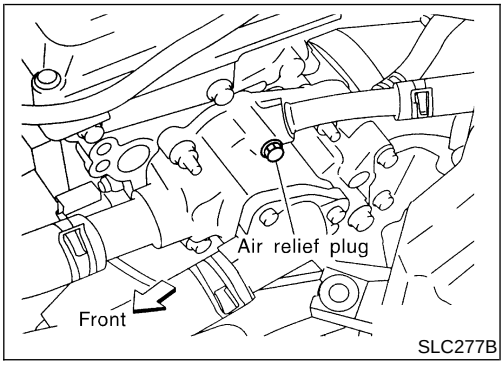

5. Remove drain plug on cylinder block and air relief plug.
6. Check drained coolant for contaminants such as rust, corrosion or discoloration. If contaminated flush engine cooling system, refer to LC-19, "FLUSHING COOLING SYSTEM".
7. Blow the coolant around the exhaust tube heat shield.

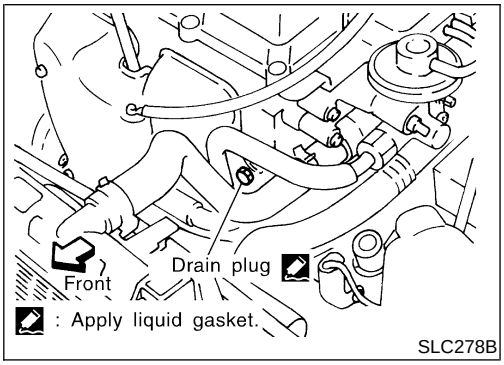

— REFILLING ENGINE COOLANT —

NLLC0037S02

1. Install reservoir tank, lower radiator hose and cylinder block drain plug.

- **Apply sealant to the thread of cylinder block drain plug.**

  : 35 - 44 N·m (3.50 - 4.50 kg-m, 26 - 32 ft-lb)

2. Fill radiator slowly with coolant until coolant spills from the air relief plug, then install air relief plug.

   Air relief plug:

   : 6.7 - 7.8 N·m (0.68 - 0.80 kg-m, 59 - 69 in-lb)

- **Use genuine Nissan anti-freeze coolant or equivalent.**

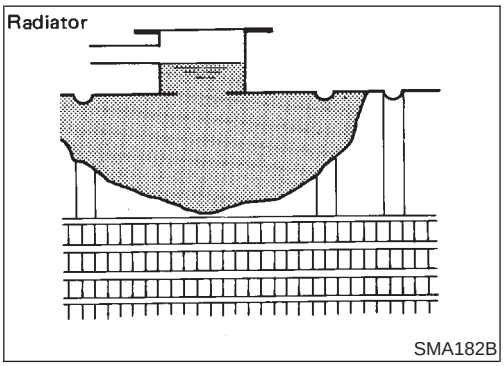

SMA182B

Refer to MA-20, "RECOMMENDED FLUIDS AND LUBRICANTS".

Coolant capacity:

Unit: ℓ (Imp qt)

With reservoir tank	6.75 (6)
Reservoir tank	0.7 (5/8)

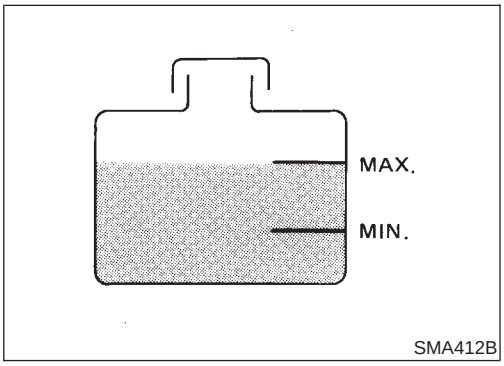

SMA412B

- **Pour coolant through coolant filler neck slowly to allow air in system to escape.**

3. Fill radiator and reservoir tank to specified level.
4. Warm up engine to normal operating temperature without radiator cap installed.

- **If coolant overflows radiator filler hole, install filler cap.**

5. Run engine at 2,500 rpm for 10 seconds and return to idle speed with radiator cap installed.

- Repeat two or three times.

Watch coolant temperature gauge so as not to overheat the engine.

6. Stop engine and cool it down.

- Cool down using a fan to reduce the time.
- If necessary, refill radiator up to filler neck with coolant.

7. Refill reservoir tank to MAX level line with coolant.
8. Repeat steps 4 through 7 two or more times with radiator cap installed until coolant level no longer drops.
9. Check cooling system for leaks with engine running.
10. Warm up engine, and check for sound of coolant flow while running engine from idle up to 3,000 rpm with heater temperature controller set at several positions between COOL and HOT.

- Sound may be noticeable at heater water cock.

11. If sound is heard, bleed air from cooling system by repeating steps 4 through 7 until coolant level no longer drops

- **Clean excess coolant from engine.**

— FLUSHING COOLING SYSTEM —

NLLC0037S03

1. Open air relief plug.
2. Fill radiator with water until water spills from the air relief hole, then close air relief plug. Fill radiator and reservoir tank with water and reinstall radiator cap.
3. Run engine and warm it up to normal operating temperature.
4. Rev engine two or three times under no-load.
5. Stop engine and wait until it cools down.
6. Drain water.
7. Repeat steps 1 through 6 until clear water begins to drain from radiator.

Overheating Cause Analysis

NLLC0028

	Symptom		Check items	
Cooling system parts malfunction	Poor heat transfer	Water pump malfunction	Worn or loose drive belt	—
		Thermostat stuck closed	—	
		Damaged fins	Dust contamination or paper clogging	
			Mechanical damage	
		Clogged radiator cooling tube	Excess foreign material (rust, dirt, sand, etc.)	
	Reduced air flow	Cooling fan does not operate	—	—
		High resistance to fan rotation		
		Damaged fan blades		
	Damaged radiator shroud	—	—	—
	Improper coolant mixture ratio	—	—	—
	Poor coolant quality	—	—	—
	Insufficient coolant	Coolant leaks	Cooling hose	Loose clamp
				Cracked hose
			Water pump	Poor sealing
			Radiator cap	Loose
				Poor sealing
			Radiator	O-ring for damage, deterioration or improper fitting
				Cracked radiator tank
				Cracked radiator core
			Reservoir tank	Cracked reservoir tank
		Overflowing reservoir tank	Exhaust gas leaks into cooling system	Cylinder head deterioration
				Cylinder head gasket deterioration

	Symptom		Check items	
Except cooling system parts malfunction	—	Overload on engine	Abusive driving	High engine rpm under no load
				Driving in low gear for extended time
				Driving at extremely high speed
			Powertrain system malfunction	—
			Installed improper size wheels and tires	
			Dragging brakes	
			Improper ignition timing	
	Blocked or restricted air flow	Blocked bumper	—	—
		Blocked radiator grille	Installed car brassiere	
			Mud contamination or paper clogging	
		Blocked radiator	—	
		Blocked condenser	—	
		Installed large fog lamp		

Service Data and Specifications (SDS)

THERMOSTAT

NLLC0029

Valve opening temperature °C (°F)	82 (180)
Valve lift mm/°C (in/°F)	More than 8/95 (0.31/203)

RADIATOR

NLLC0030

Unit: kPa (bar, kg/cm^2, psi)

Cap reliefpressure	Standard	78 - 98 (0.78 - 0.98, 0.8 - 1.0, 11 - 14)
	Limit	59 (0.59, 0.6, 9)
Leakage test pressure		157 (1.57, 1.6, 23)

COOLANT CAPACITY

NLLC0038

Unit: ℓ (Imp qt)

With reservoir tank	6.75 (6)
Reservoir tank	0.7 (5/8)

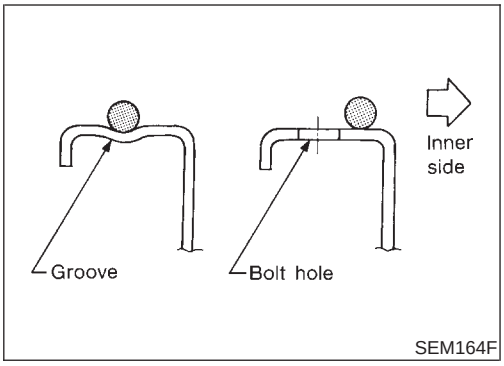

SEM164F

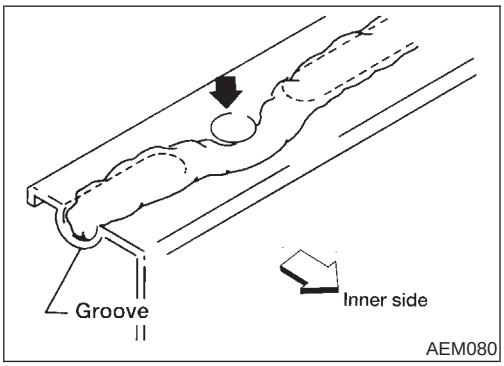

AEM080

Precautions

LIQUID GASKET APPLICATION PROCEDURE

NLLC0039

1. Use a scraper to remove all traces of old liquid gasket from mating surfaces and grooves. Also, completely clean any oil from these areas.
2. Apply a continuous bead of liquid gasket to mating surfaces. (Use Genuine Liquid Gasket or equivalent.)
   - For oil pan, be sure liquid gasket diameter is 4.0 to 5.0 mm (0.157 to 0.197 in).
   - For areas except oil pan, be sure liquid gasket diameter is 2.0 to 3.0 mm (0.079 to 0.118 in).
3. Apply liquid gasket around the inner side of bolt holes (unless otherwise specified).
4. Assembly should be done within 5 minutes after coating.
5. Wait at least 30 minutes before refilling engine oil and engine coolant.

Preparation

SPECIAL SERVICE TOOLS

NLLC0040

Tool number Tool name	Description	
ST25051001 Oil pressure gauge	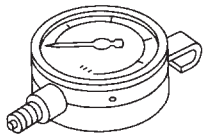 NT050	
ST25052000 Hose	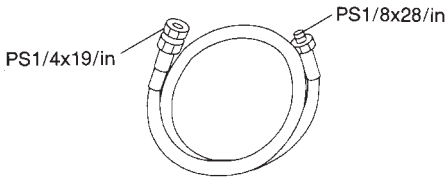 NT559	Adapting oil pressure gauge to upper oil pan
WS39930000 Tube presser	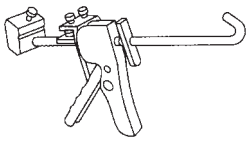 NT052	Pressing the tube of liquid gasket

Lubrication Circuit

NLLC0041

For Europe

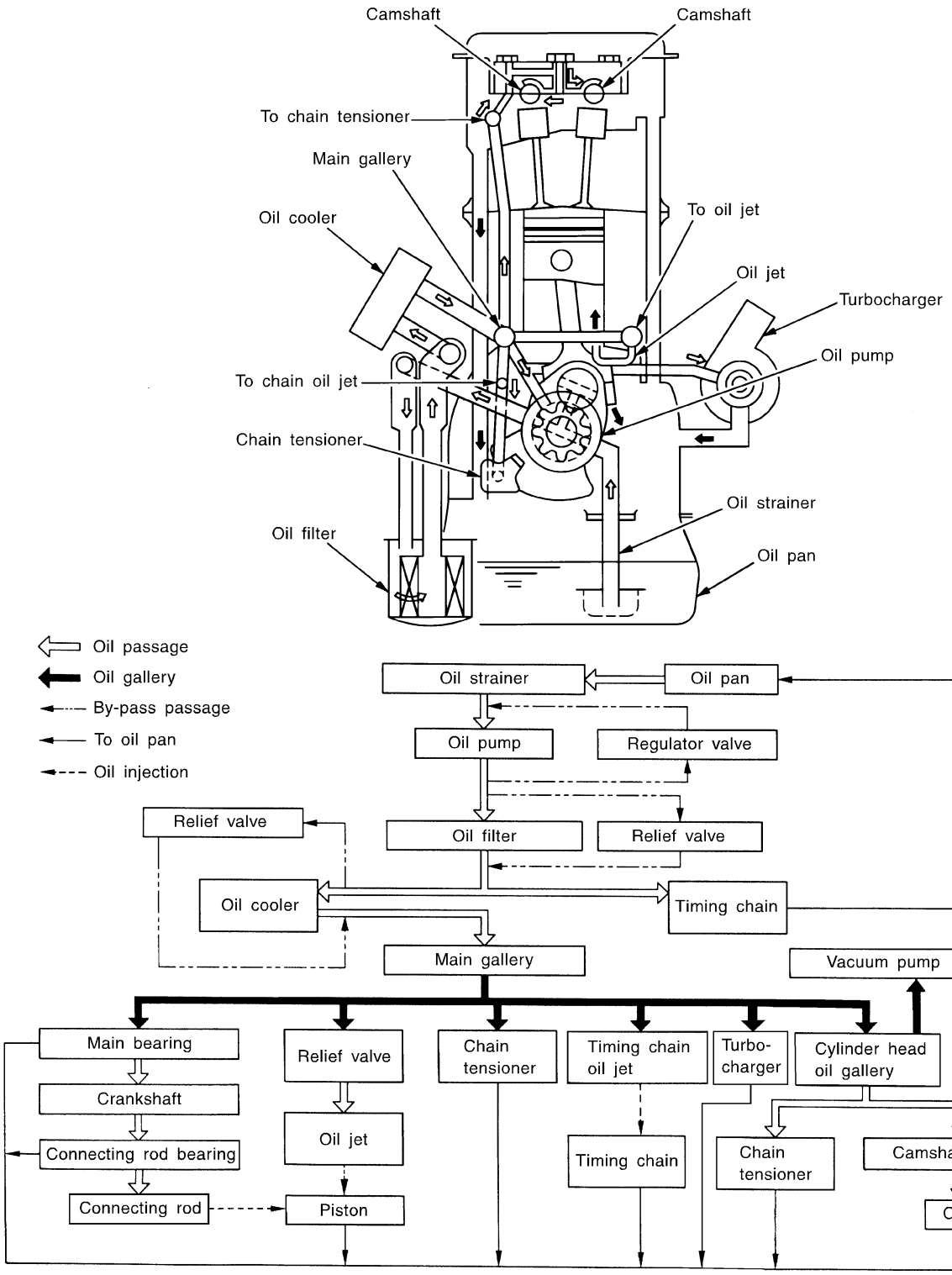

JLC315B

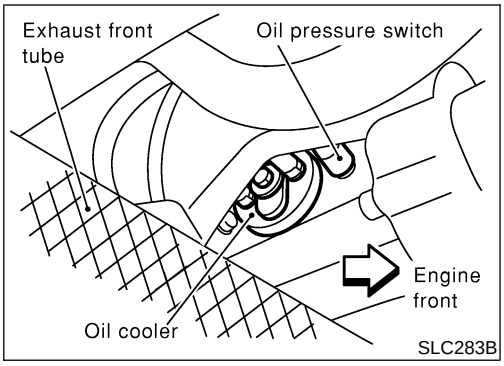

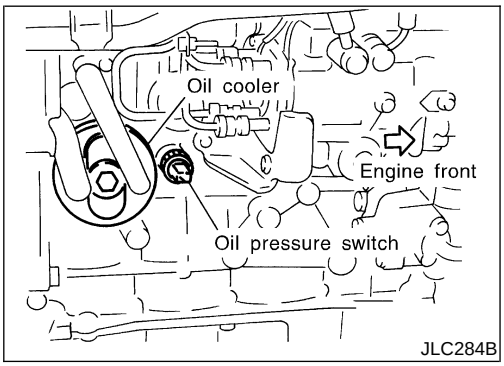

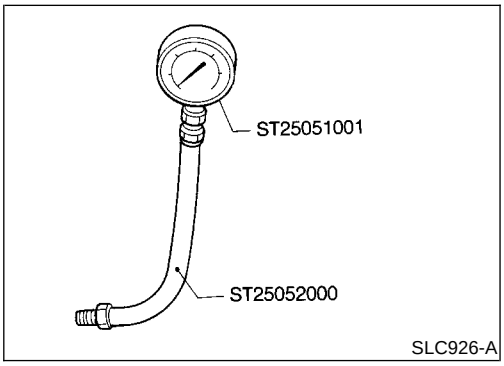

Oil Pressure Check

NLLC0042

WARNING:

- **Be careful not to burn yourself, as the engine and oil may be hot.**
- **Oil pressure check should be done in “Neutral position”.**

1. Check oil level.
2. Remove exhaust front tube.
3. Remove oil pressure switch.
4. Install pressure gauge.
5. Install exhaust front tube.
6. Start engine and warm it up to normal operating temperature.
7. Check oil pressure with engine running under no-load.

Engine speed rpm	Approximate discharge pressure kPa (bar, kg/cm^2, psi)
Idle speed	More than 140 (1.40, 1.43, 20.3)
2,000	More than 270 (2.69, 2.75, 39.1)
4,000	More than 430 (4.29, 4.38, 62.3)

If difference is extreme, check oil passage and oil pump for oil leaks.

8. After the inspections, install the oil pressure switch as follows.

a. Remove the old sealant adhering to the switch and engine.

b. Apply Genuine Liquid Gasket or equivalent to the thread and tighten.

: 13 - 17 N·m (1.25 - 1.75 kg-m, 9 - 12 ft-lb)

Oil Pump

REMOVAL AND INSTALLATION

NLLC0043

- **When installing oil pump, apply engine oil to rotors.**

Refer to EM-176, “Primary Timing Chain” for removal.
Reinstall all parts in the reverse order of removal.

DISASSEMBLY AND ASSEMBLY

NLLC0044

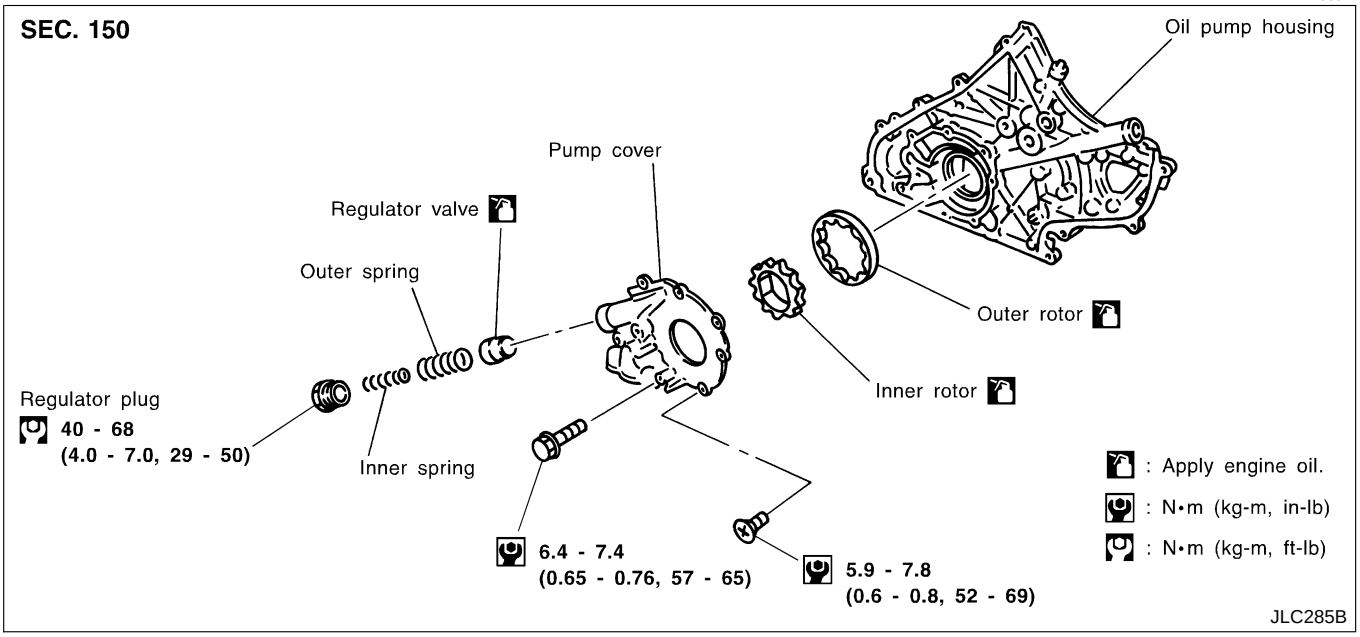

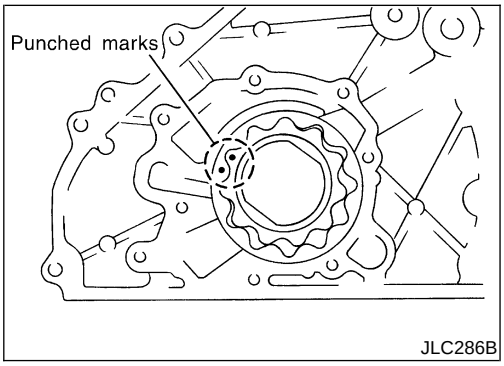

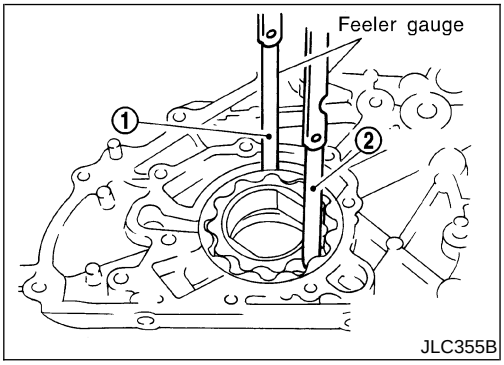

OIL PUMP INSPECTION

NLLC0045

- **Install the inner rotor and outer rotor with the punched marks on the pump cover side.**

Using a feeler gauge, straightedge and micrometers, check the following clearances:

Unit: mm (in)

Body to outer rotor radial clearance **1**	0.114 - 0.260 (0.0045 - 0.0102)
Inner rotor to outer rotor tip clearance **2**	Below 0.18 (0.0071)
Body to inner rotor axial clearance **3**	0.050 - 0.090 (0.0020 - 0.0035)
Body to outer rotor axial clearance **4**	0.030 - 0.190 (0.0012 - 0.0075)
Inner rotor to brazed portion of housing clearance **5**	0.045 - 0.091 (0.0018 - 0.0036)

- **If the tip clearance (2) exceeds the limit, replace rotor set.**
- **If body to rotor clearances (1, 3, 4, 5) exceed the limit, replace oil pump body assembly.**

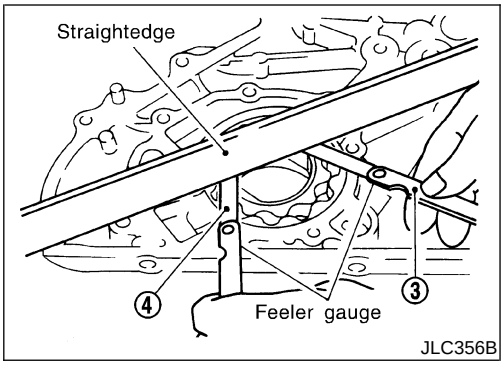

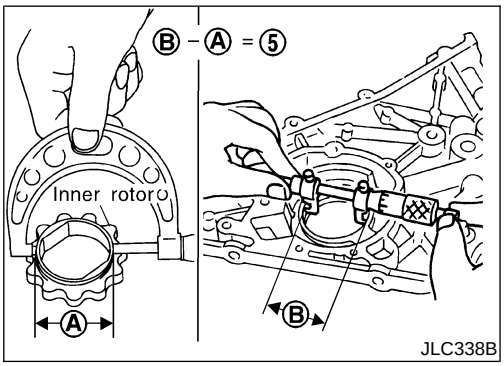

REGULATOR VALVE INSPECTION

NLLC0046

1. Visually inspect components for wear and damage.
2. Check oil pressure regulator valve sliding surface and valve spring.
3. Coat regulator valve with engine oil. Check that it falls smoothly into the valve hole by its own weight.

If damaged, replace regulator valve set or oil pump body.

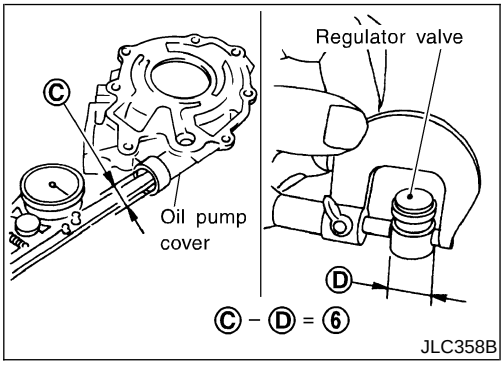

4. Check regulator valve to oil pump body clearance.

   Clearance 6:

   6 : 0.040 - 0.097 mm (0.0016 - 0.0038 in)

If it exceeds the limit, replace oil pump body.

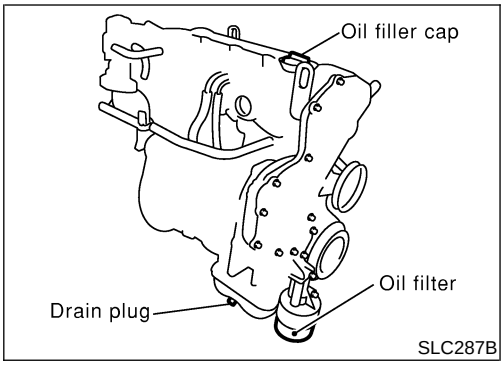

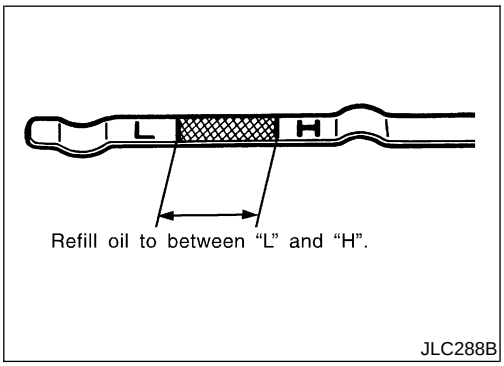

Changing Engine Oil

NLLC0074

WARNING:

- **Be careful not to burn yourself, as the engine oil is hot.**
- **Prolonged and repeated contact with used engine oil may cause skin cancer; try to avoid direct skin contact with used oil. If skin contact is made, wash thoroughly with soap or hand cleaner as soon as possible.**

1. Warm up engine, and check for oil leakage from engine components.
2. Stop engine and wait more than 10 minutes.
3. Remove drain plug and oil filler cap.
4. Drain oil and refill with new engine oil.

Oil Specification and Viscosity:

- **API grade CF-4**
- **ACEA grade B1, B3**

  Refer to MA-20, "RECOMMENDED FLUIDS AND LUBRICANTS".

Refill oil capacity (Approximately):

Unit: ℓ (Imp qt)

Drain and refill	Without oil filter change	4.9 (4 - 3/8)
	With oil filter change	5.2 (4 - 5/8)
Dry engine (engine overhaul)		6.3 (5 - 1/2)

CAUTION:

- **Be sure to clean drain plug and install with new washer.**

  Drain plug:

  : 29 - 39 N·m (3.0 - 4.0 kg-m, 22 - 29 ft-lb)
- **The refill capacity depends on the oil temperature and drain time. Use these specifications for reference only. Always use the dipstick to determine when the proper amount of oil is in the engine.**

5. Check oil level.
6. Start engine and check area around drain plug and oil filter for oil leakage.
7. Run engine for a few minutes, then turn it off. After several minutes, check oil level.

Oil Filter Bracket

NLLC0075

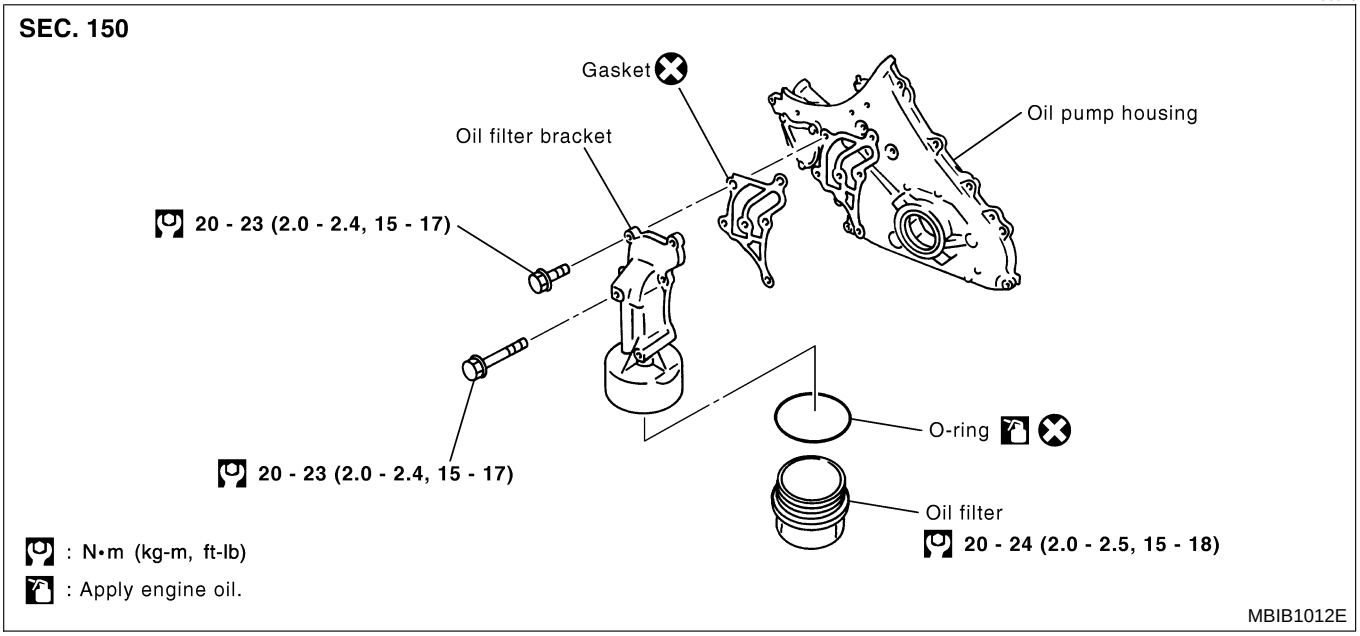

REMOVAL AND INSTALLATION

NLLC0075S01

1. Remove the undercover.
2. Steer the front wheel to the right.
3. Remove the right splash cover.
4. Remove the oil filter bracket bolt.
5. Reinstall all removed parts in the reverse order of removal.

- Insert the top mounting bolt to the oil filter bracket beforehand, and set the oil filter bracket to the installation location.

Changing Oil Filter

NLLC0076

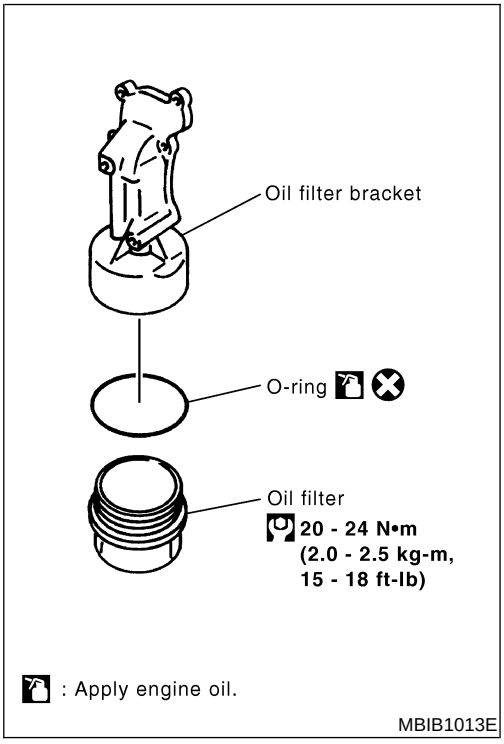

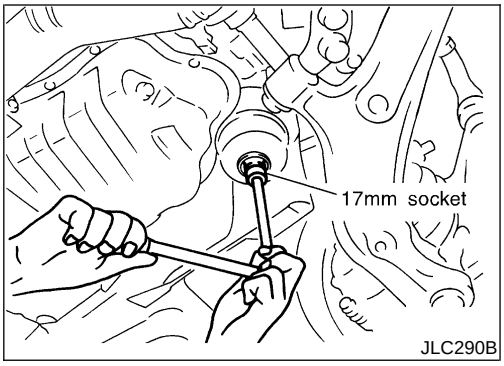

REMOVAL

NLLC0076S01

1. Using a socket wrench [plane-to-plane width: 17 mm (0.67 in)], loosen the oil filter approximately four turns.

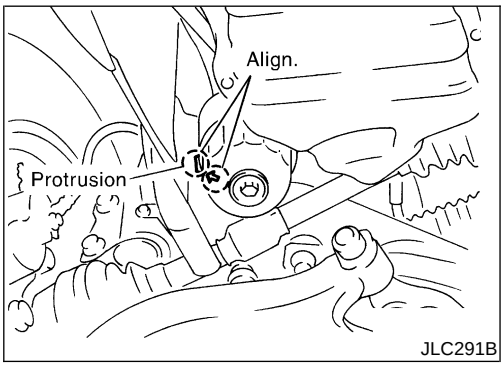

2. Drain the oil after matching the "DRAIN" arrow mark at the bottom of the oil filter to the protrusion on the oil filter bracket.
- Catch the oil with a pan or cloth.

CAUTION:
- **The drained oil flows over the right surface of the oil filter.**
- **Completely wipe clean any engine oil remaining on the oil filter or vehicle.**

3. Remove the oil filter.

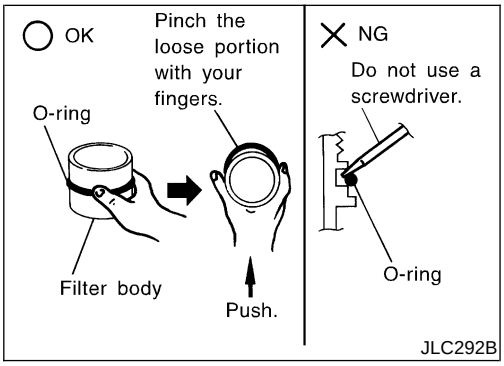

4. Remove the O-ring from the oil filter.
- Push the O-ring in one direction, lift the slack part using fingers, and remove the O-ring from the oil filter.

CAUTION:
Do not use wires or flat-bladed screwdrivers etc. as they may cause damage to the oil filter.

INSTALLATION

NLLC0076S02

1. Completely remove all foreign objects adhering to the inside of the oil filter or O-ring mounting area (filter side and bracket side).
2. Install O-ring to the oil filter.
3. Install the oil filter to the oil filter bracket.
   : 20 - 24 N·m (2.0 - 2.5 kg-m, 15 - 18 ft-lb)
4. After warming up the engine, check for engine oil leakage.

Oil Cooler

NLLC0077

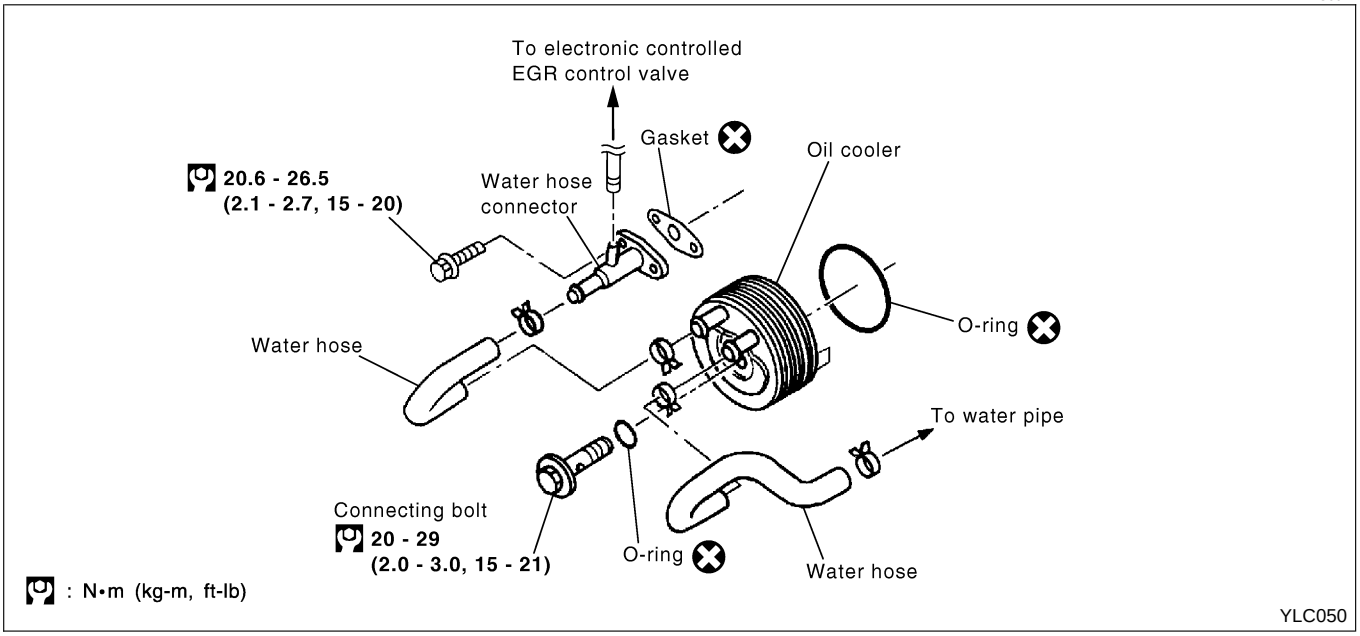

REMOVAL AND INSTALLATION

NLLC0077S01

1. Draining the coolant
   Refer to LC-40, “Changing Engine Coolant”.
2. Remove the exhaust front tube.

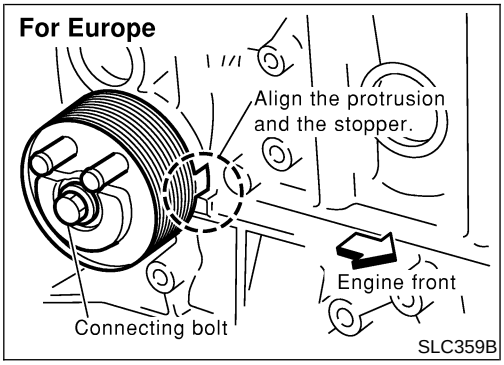

3. Reinstall all removed parts in the reverse order of removal.

- Confirm that no foreign objects are adhering to the installation planes of the oil cooler or block.
- Tighten the connecting bolt after aligning the stopper on the cylinder block side with protrusion of the oil cooler.

Service Data and Specifications (SDS)

OIL PRESSURE CHECK

=NLLC0048

Engine speed rpm	Approximate discharge pressure kPa (bar, kg/cm^2, psi)
Idle speed	More than 140 (1.40, 1.43, 20.3)
2,000	More than 270 (2.69, 2.75, 39.1)
4,000	More than 430 (4.29, 4.38, 62.3)

REGULATOR VALVE INSPECTION

NLLC0049
Unit: mm (in)

Regulator valve to oil pump cover clearance	0.040 - 0.097 (0.0016 - 0.0038)

OIL PUMP INSPECTION

NLLC0050
Unit: mm (in)

Body to outer rotor radial clearance	0.114 - 0.260 (0.0045 - 0.0102)
Inner rotor to outer rotor tip clearance	Below 0.18 (0.0071)
Body to inner rotor axial clearance	0.050 - 0.090 (0.0020 - 0.0035)
Body to outer rotor axial clearance	0.030 - 0.190 (0.0012 - 0.0075)
Inner rotor to brazed portion of housing clearance	0.045 - 0.091 (0.0018 - 0.0036)

ENGINE OIL CAPACITY

NLLC0078
Unit: ℓ (Imp qt)

Drain and refill (Approximately)	Without oil filter change	4.9 (4-3/8)
	With oil filter change	5.2 (4-5/8)
Dry engine (engine overhaul)		6.3 (5-1/2)

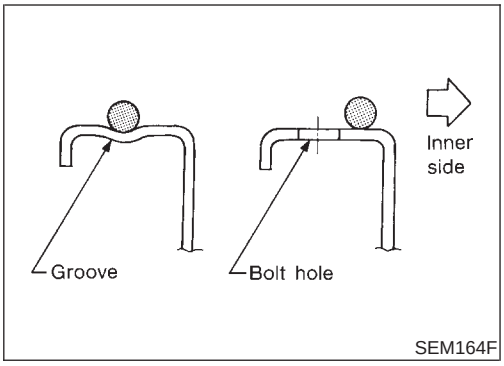

SEM164F

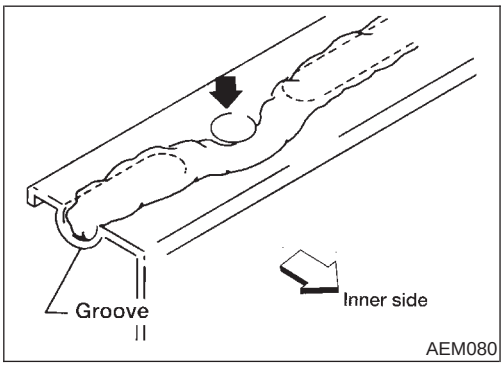

AEM080

Precautions

LIQUID GASKET APPLICATION PROCEDURE

NLLC0051

1. Use a scraper to remove all traces of old liquid gasket from mating surfaces and grooves. Also, completely clean any oil from these areas.
2. Apply a continuous bead of liquid gasket to mating surfaces. (Use Genuine Liquid Gasket.)
   - For oil pan, be sure liquid gasket diameter is 4.0 to 5.0 mm (0.157 to 0.197 in).
   - For areas except oil pan, be sure liquid gasket diameter is 2.0 to 3.0 mm (0.079 to 0.118 in).
3. Apply liquid gasket around the inner side of bolt holes (unless otherwise specified).
4. Assembly should be done within 5 minutes after coating.
5. Wait at least 30 minutes before refilling engine oil and engine coolant.

Preparation

SPECIAL SERVICE TOOLS

NLLC0052

Tool number Tool name	Description
EG17650301 Radiator cap tester adapter	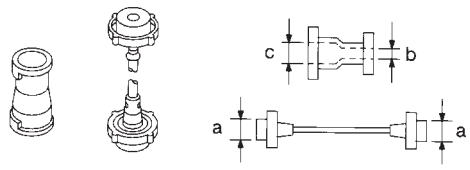 NT564 Adapting radiator cap tester to radiator filler neck **a: 28 (1.10) dia.** **b: 31.4 (1.236) dia.** **c: 41.3 (1.626) dia.** Unit: mm (in)

Cooling Circuit

NLLC0053

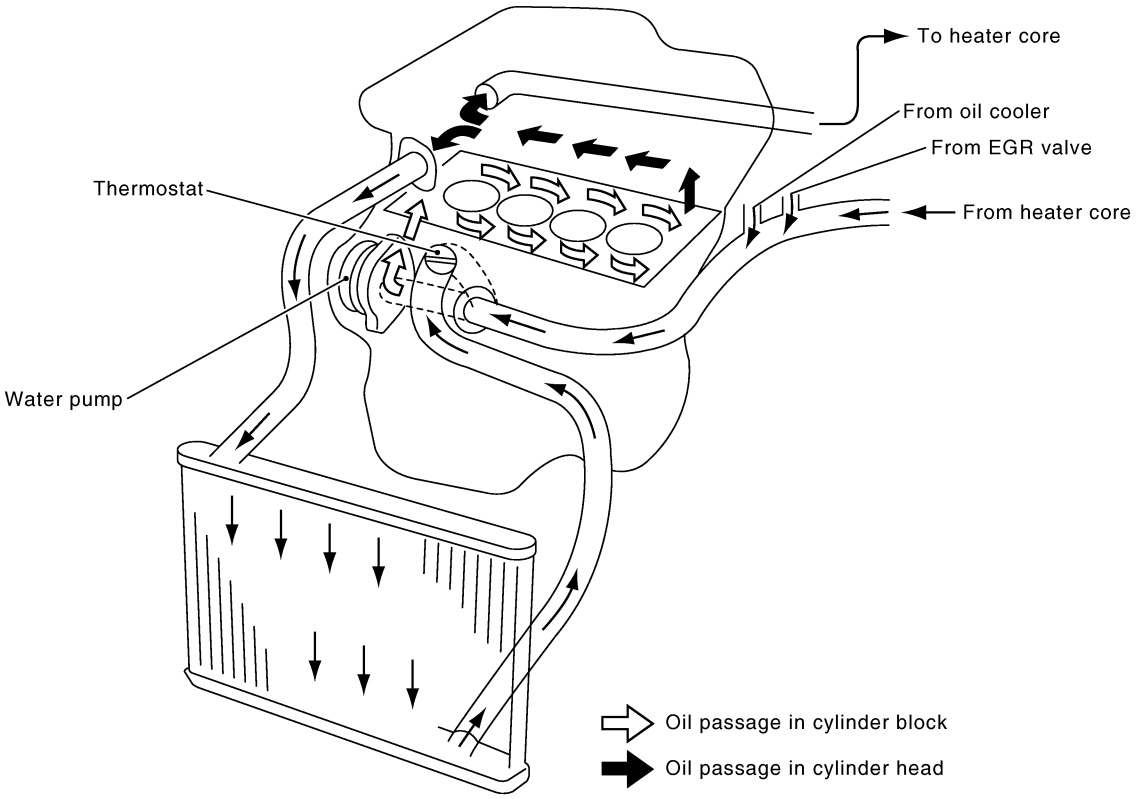

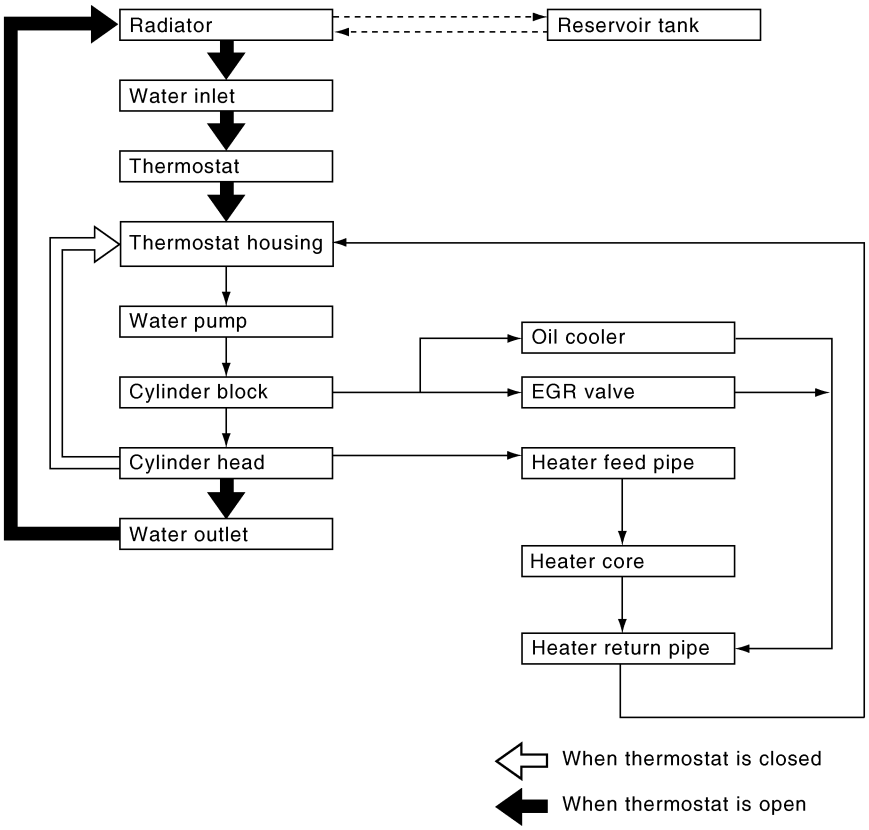

YLC046

System Check

NLLC0054

WARNING:

Never remove the radiator cap when the engine is hot; serious burns could be caused by high pressure fluid escaping from the radiator.

Wrap a thick cloth around the cap and carefully remove it by turning it a quarter turn to allow built-up pressure to escape and then turn the cap all the way off.

CHECKING COOLING SYSTEM HOSES

NLLC0054S01

Check hoses for improper attachment, leaks, cracks, damage, loose connections, chafing and deterioration.

CHECKING RADIATOR

NLLC0054S02

Check radiator for mud or clogging. If necessary, clean radiator as follows.

- Be careful not to bend or damage the radiator fins.
- When radiator is cleaned without removal, remove all surrounding parts such as cooling fan, radiator shroud and horns. Then tape the harness and connectors to prevent water from entering.

1. Apply water by hose to the back side of the radiator core vertically downward.
2. Apply water again to all radiator core surfaces once per minute.
3. Stop washing if any stains no longer flow out from the radiator.
4. Blow air into the back side of radiator core vertically downward.
   - Use compressed air lower than 490 kPa (4.9 bar, 5 kg/cm^2 , 71 psi) and keep distance more than 30 cm (11.8 in).
5. Blow air again into all the radiator core surfaces once per minute until no water sprays out.

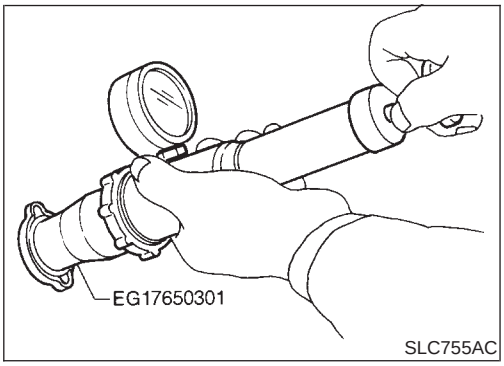

SLC755AC

CHECKING RADIATOR CAP

NLLC0054S03

To check radiator cap, apply pressure to cap with a tester.

Radiator cap relief pressure:
Standard
78 - 98 kPa
(0.78 - 0.98 bar, 0.8 - 1.0 kg/cm^2, 11 - 14 psi)
Limit
59 kPa (0.59 bar, 0.6 kg/cm^2, 9 psi)

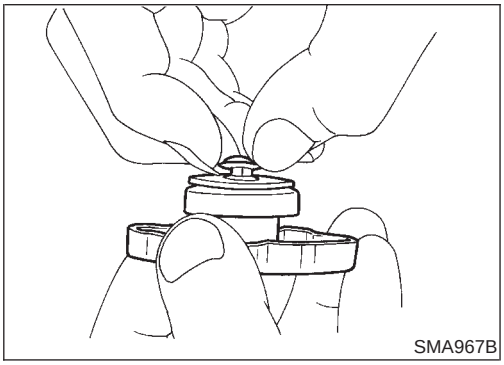
SMA967B

Pull the negative pressure valve to open it.
Check that it closes completely when released.

- Check the radiator cap negative pressure valve for contamination or damage to the valve seat.
- Move the negative pressure valve to check for abnormalities to the opening/shutting operation.

CAUTION:

- **Be sure to perform the inspections after cooling down the engine.**
- **Before connecting the radiator cap to the tester, apply water or LLC to the cap sealing.**

- Replace the radiator cap if abnormalities are found with the negative pressure valve, or if the valve opening pressure is out of the standard range.

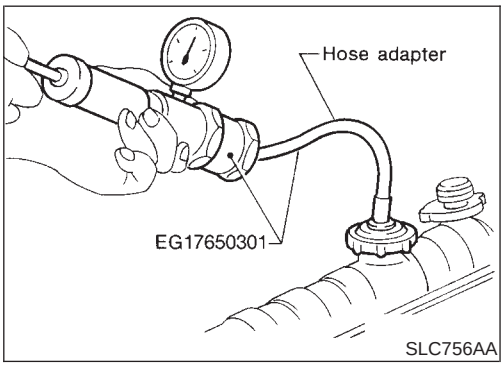

CHECKING COOLING SYSTEM FOR LEAKS

NLLC0054S04

To check for leakage, apply pressure to the cooling system with a tester.

Testing pressure:

157 kPa (1.57 bar, 1.6 kg/cm^2, 23 psi)

CAUTION:

- **Higher than the specified pressure may cause radiator damage.**
- **Be sure to perform the inspections after cooling down the engine.**
- **Use a hose adapter between the cap tester and filler neck to prevent the radiator filler neck from deforming.**
- If any abnormalities are found, repair or replace the malfunctioning parts.

Water Pump

REMOVAL AND INSTALLATION

NLLC0055

CAUTION:

- **When removing water pump assembly, be careful not to get coolant on drive belt.**
- **Water pump cannot be disassembled and should be replaced as a unit.**
- **After installing water pump, connect hose and clamp securely, then check for leaks using radiator cap tester.**

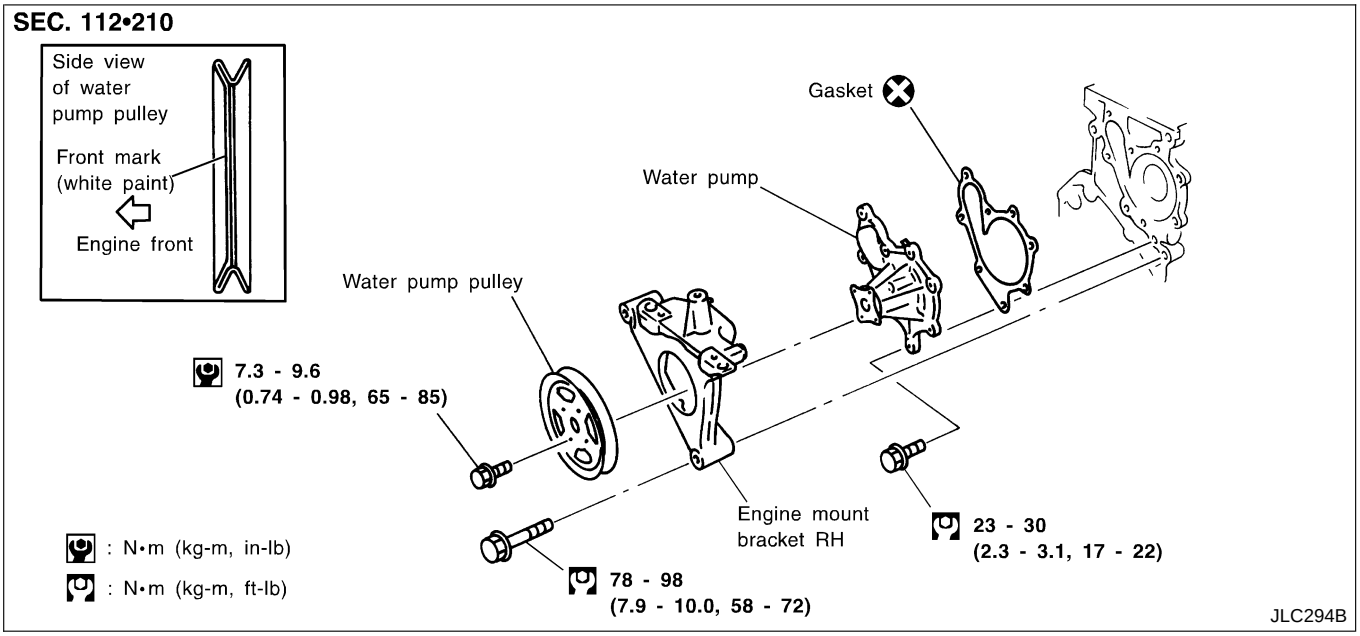

REMOVAL

NLLC0056

1. Remove the undercover, splash cover (right), and accessory belt.
2. Drain engine coolant. Refer to LC-40, "Changing Engine Coolant".
3. Support the bottom of the oil pan with a floor jack etc., and remove the right engine mount bracket (front side of the engine).
4. Remove the water pump pulley.
- Loosen the pulley bolts after fixing the pulley using a screwdriver etc.
5. Remove engine mount brackets.
6. Remove the water pump.

INSPECTION

NLLC0057

- Check for rust and contamination adhering to the water pump and vane.
- Turn the pump shaft by hand, and check that the pump turns smoothly without looseness.

INSTALLATION

NLLC0058

- Install the parts in the reverse order of removal.
- Install the water pump pulley with the front mark (painted white, used to prevent errors during assembly) facing the front of the engine. Refer to the figure above.

Thermostat

REMOVAL AND INSTALLATION

NLLC0059

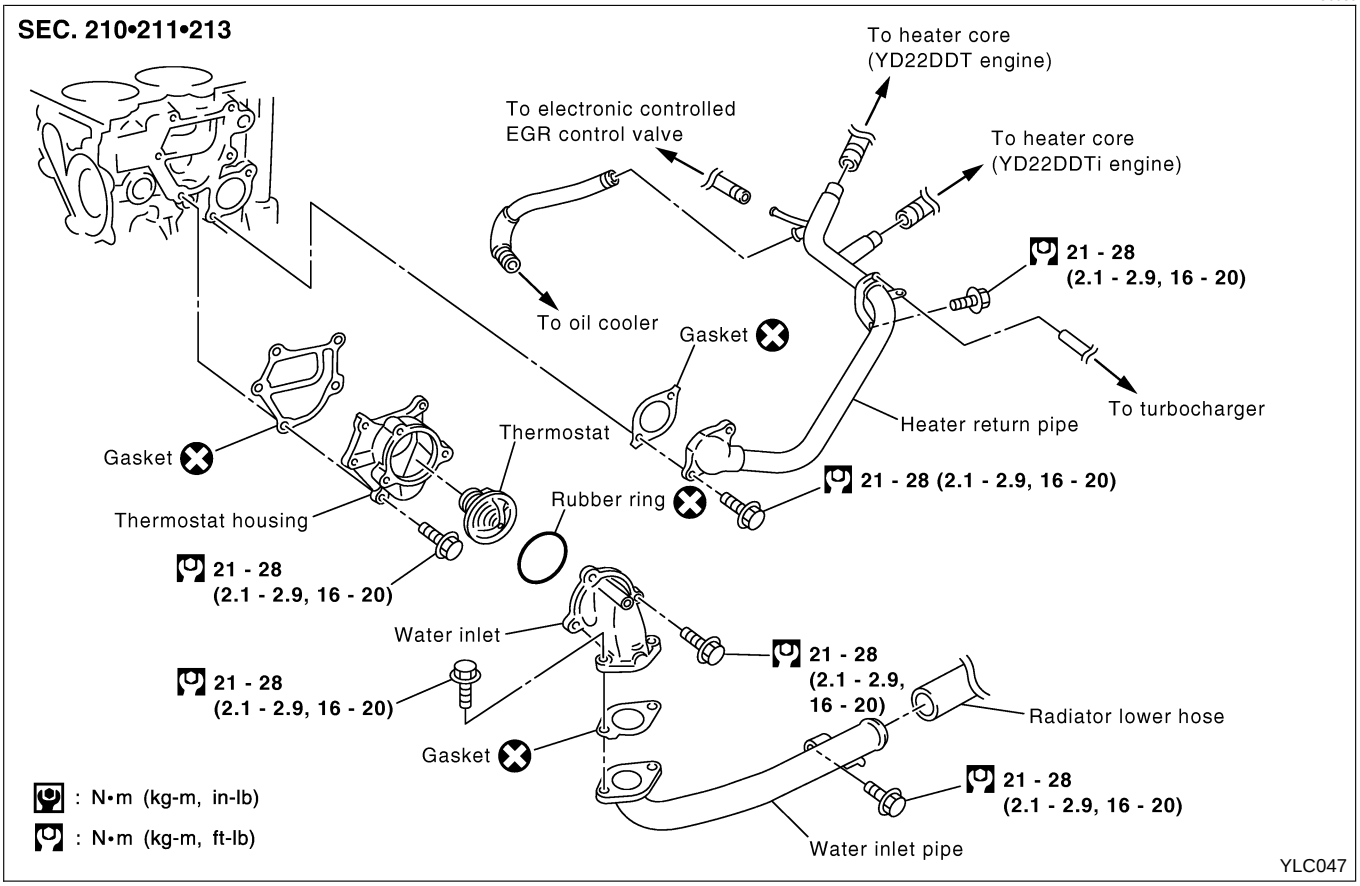

- **Be careful not to spill coolant over engine compartment. Use a rag to absorb coolant.**

1. Drain engine coolant. Refer to LC-40, “Changing Engine Coolant”.
2. Remove exhaust manifold cover.
3. Remove water inlet.
4. Remove thermostat.

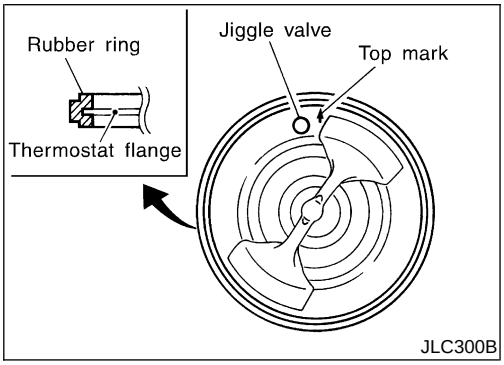

5. Install thermostat with jiggle valve facing upward.
- **Carefully install the rubber ring to the flange of the thermostat, making sure it does not slip out of place.**
6. After installation and refilling coolant, run engine for a few minutes, and check for leaks.

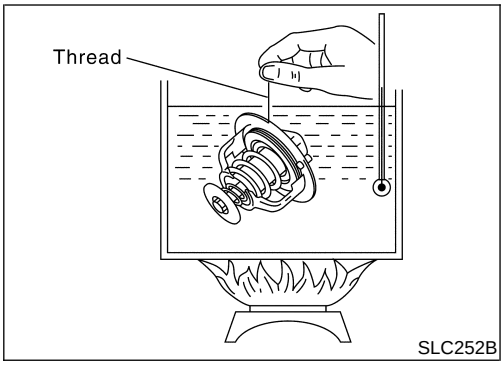

INSPECTION

NLLC0060

1. Check valve seating condition at ordinary room temperatures. It should seat tightly.
2. Check valve opening temperature and maximum valve lift.

	Standard
Valve opening temperature	Above 80 - 84°C (176 - 183°F)
Valve lift	More than 10 mm/95°C (0.39 in/203°F)

3. Then check if valve closes at 5°C (9°F) below valve opening temperature.

Radiator

COMPONENTS

NLLC0083

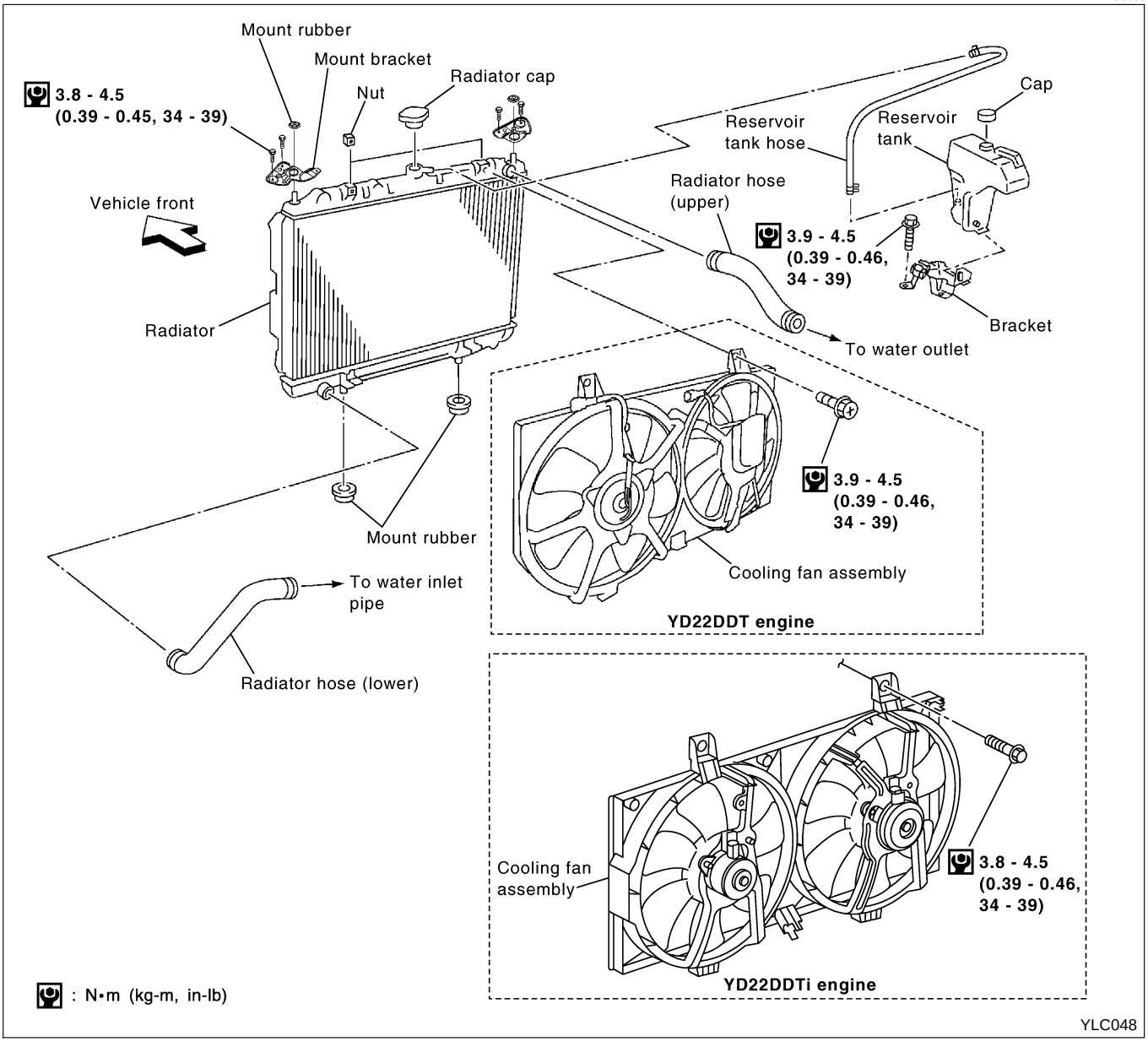

REMOVAL AND INSTALLATION

NLLC0063

1. Remove under cover.
2. Drain coolant by removing lower radiator hose.
3. Disconnect radiator upper and lower hoses.
4. Remove radiator shroud.
5. Disconnect reservoir tank hose.
6. Remove radiator mounting bracket.
7. Remove radiator.
8. After repairing or replacing radiator, install any part removed in reverse order of removal.

When filling radiator with coolant, refer to LC-40, “Changing Engine Coolant”.

Cooling Fan

NLLC0064

COMPONENTS

NLLC0064S01

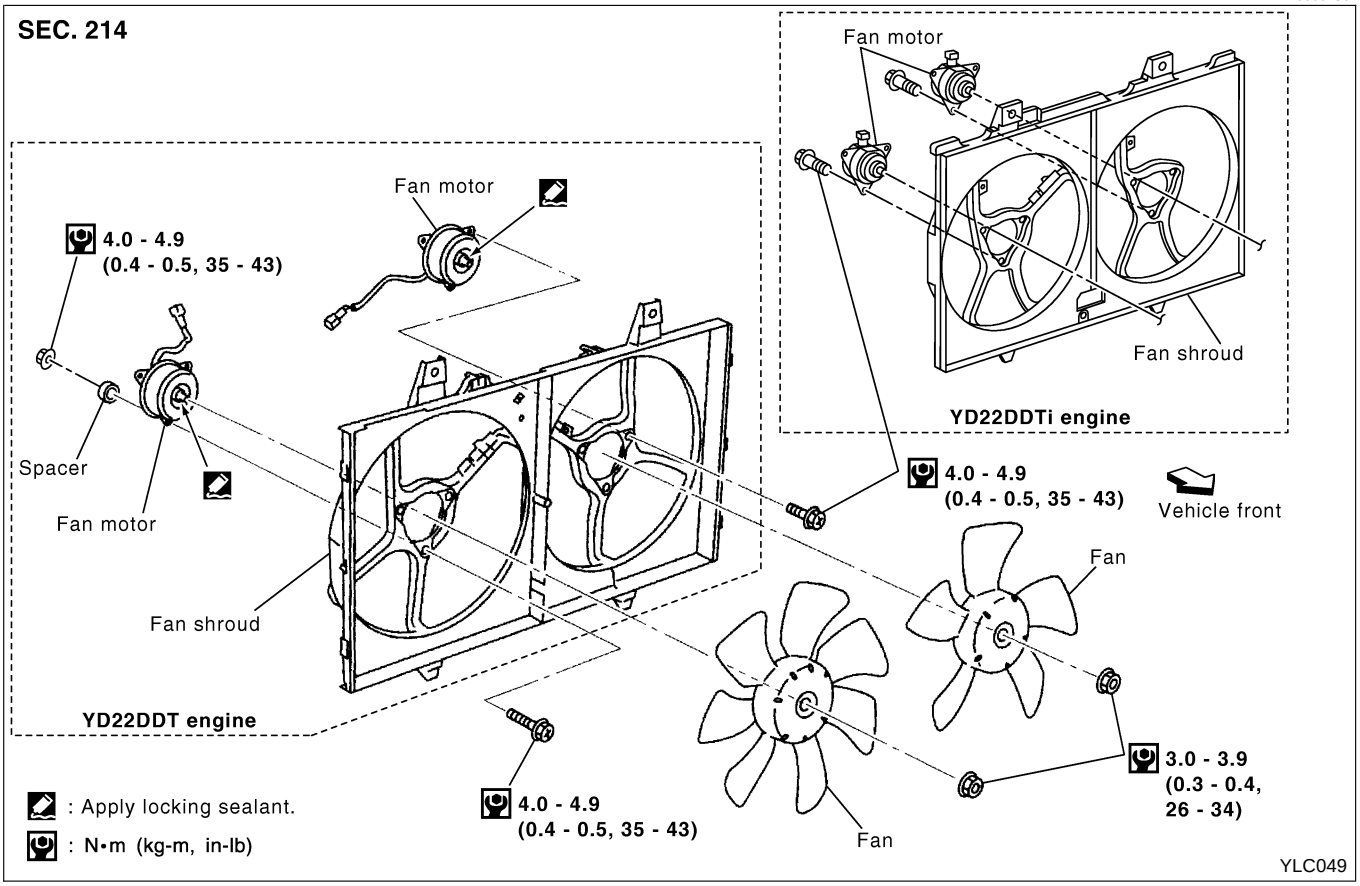

CONTROL SYSTEM

NLLC0064S02

Cooling fans are controlled by ECM. For details, refer to EC-1072 or EC-1364, “TROUBLE DIAGNOSIS FOR OVERHEAT”.

Changing Engine Coolant

NLLC0079

WARNING:

To avoid the danger of being scalded, never change the coolant when the engine is hot.

— DRAINING ENGINE COOLANT —

NLLC0079S01

1. Disconnect lower radiator hose, and remove radiator cap.
- **Be careful not to allow coolant to contact drive belts.**
- Cover the exhaust tube heat shield to prevent from splashing coolant.
2. Remove reservoir tank, drain coolant, then clean reservoir tank.
3. Remove drain plug of cylinder block.
4. Check drained coolant for contaminants such as rust, corrosion or discoloration. If contaminated flush engine cooling system, refer to LC-41, “FLUSHING COOLING SYSTEM”.

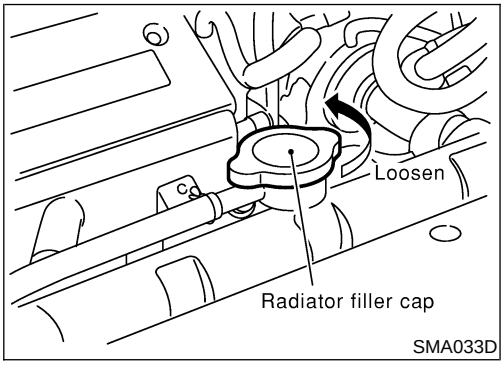

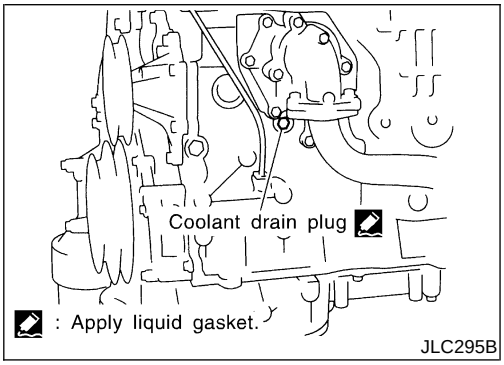

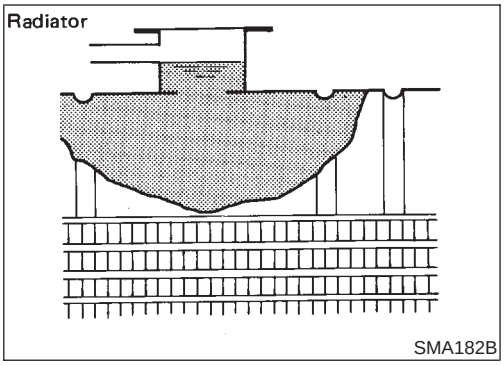

SMA182B

— REFILLING ENGINE COOLANT —

NLLC0079S02

1. Install reservoir tank, lower radiator hose and cylinder block drain plug.

- **Apply sealant to the thread of cylinder block drain plugs.**
  : 8 - 11 N·m (0.8 - 1.2 kg-m, 70 - 104 in-lb)

2. Fill radiator to specified level.

- Fill coolant to the level of the radiator cap at a rate of 2ℓ (1-3/4 Imp qt)/min or lower.

CAUTION:
If the filling rate is too fast, this could lead to air being mixed in the coolant. Be sure to fill the coolant slowly according to the rate indicated above.

- **Use genuine Nissan anti-freeze coolant or equivalent.**

Refer to MA-20, "RECOMMENDED FLUIDS AND LUBRICANTS".

Engine coolant capacity (With reservoir tank):
7.05 ℓ (6–1/4 Imp qt)
Reservoir tank capacity:
0.7 ℓ (5/8 Imp qt)

- **Pour coolant through coolant filler neck slowly to allow air in system to escape.**

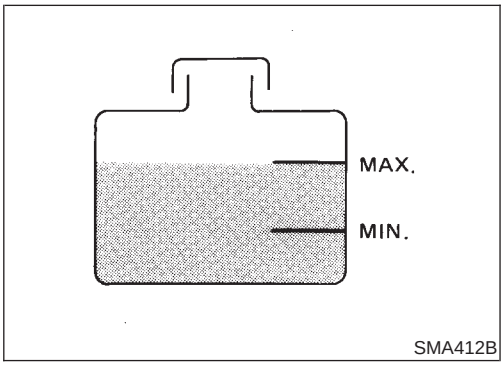

SMA412B

3. Fill reservoir tank to specified level.
4. Warm up engine to normal operating temperature without radiator cap installed.

- **If coolant overflows radiator filler hole, install radiator cap.**

5. Run engine at 3,000 rpm for 10 seconds and return to idle speed with radiator cap installed.

- Repeat two or three times.

Watch coolant temperature gauge so as not to overheat the engine.

6. Stop engine and cool it down.

- Cool down using a fan to reduce the time.
- If necessary, refill radiator up to filler neck with coolant.

7. Refill reservoir tank to MAX level line with coolant.
8. Repeat steps 4 through 7 two or more times with radiator cap installed until coolant level no longer drops.
9. Check cooling system for leaks with engine running.
10. Warm up engine, and check for sound of coolant flow while running engine from idle up to 3,000 rpm with heater temperature controller set at several positions between COOL and HOT.

- Sound may be noticeable at heater water cock.

11. If sound is heard, bleed air from cooling system by repeating steps 4 through 7 until coolant level no longer drops

- **Clean excess coolant from engine.**

— FLUSHING COOLING SYSTEM —

NLLC0079S03

1. Fill radiator and reservoir tank with water and reinstall radiator cap.
2. Run engine and warm it up to normal operating temperature.
3. Rev engine two or three times under no-load.
4. Stop engine and wait until it cools down.
5. Drain water.
6. Repeat steps 1 through 5 until clear water begins to drain from

radiator.

Overheating Cause Analysis

NLLC0070

	Symptom		Check items	
Cooling system parts malfunction	Poor heat transfer	Water pump malfunction	Worn or loose drive belt	—
		Thermostat stuck closed	—	
		Damaged fins	Dust contamination or paper clogging	
			Mechanical damage	
		Clogged radiator cooling tube	Excess foreign material (rust, dirt, sand, etc.)	
	Reduced air flow	Cooling fan does not operate	—	—
		High resistance to fan rotation		
		Damaged fan blades		
	Damaged radiator shroud	—	—	—
	Improper coolant mixture ratio	—	—	—
	Poor coolant quality	—	—	—
	Insufficient coolant	Coolant leaks	Cooling hose	Loose clamp
				Cracked hose
			Water pump	Poor sealing
			Radiator cap	Loose
				Poor sealing
			Radiator	O-ring for damage, deterioration or improper fitting
				Cracked radiator tank
				Cracked radiator core
			Reservoir tank	Cracked reservoir tank
		Overflowing reservoir tank	Exhaust gas leaks into cooling system	Cylinder head deterioration
				Cylinder head gasket deterioration

	Symptom		Check items	
Except cooling system parts malfunction	—	Overload on engine	Abusive driving	High engine rpm under no load
				Driving in low gear for extended time
				Driving at extremely high speed
			Powertrain system malfunction	—
			Installed improper size wheels and tires	
			Dragging brakes	
			Improper ignition timing	
	Blocked or restricted air flow	Blocked bumper	—	—
		Blocked radiator grille	Installed car brassiere	
			Mud contamination or paper clogging	
		Blocked radiator	—	
		Blocked condenser	—	
		Installed large fog lamp		

Service Data and Specifications (SDS)

THERMOSTAT

NLLC0071

Valve opening temperature	Above 80 - 84°C (176 - 183°F)
Valve lift	More than 10 mm/95°C (0.39 in/203°F)

RADIATOR

NLLC0073

Unit: kPa (bar, kg/cm^2, psi)

Cap relief pressure	Standard	78 - 98 (0.78 - 0.98, 0.8 - 1.0, 11 - 14)
	Limit	59 (0.59, 0.6, 9)
Leakage test pressure		157 (1.57, 1.6, 23)

ENGINE COOLANT CAPACITY

NLLC0080

Unit: ℓ (Imp qt)

With reservoir tank	7.05 (6-1/4)
Reservoir tank	0.7 (5/8)

NOTES